FACET

INDUSTRIAL APPLICATIONS

Making the world safer, healthier and more productive®

Facet
Filtration Group®

General Industrial Products Index

TABLE OF CONTENTS

Section 1 - Liquid Filtration

Liquid Filtration - General Description

M Series - High Efficiency Pleated Paper Filter Cartridges

CIF Series - High Efficiency Pleated Paper Coreless Filter Cartridges

CIF Series - Center Tube Kit - Installation Instructions

FI Series - Filter Cartridges

FI3739 Series - Filter Cartridges

FIS Series - Filter Cartridges

MM Series - Screen Wrapped Filter Cartridges

M Series - Filter Housings

Liquid Filtration Application Information

Section 2 - Liquid / Liquid Separation

Liquid / Liquid Separation - General Description

Coalescer and Separator Cartridges - General Description

Coalescer Cartridges - General Information

Industrial Coalescer Cartridges

EB Series - Oil Water Cartridges

CC-U5-2DP - Aromatic Coalescer Cartridges

Industrial Separator Cartridges

Single-Stage Repack Coalescers

VCS Series - Two-Stage Vertical Coalescer Separator Housings

HP Series - Single-Stage Coalescer Housings

CKS Series - Conversion Kits

Liquid/Liquid Separation Application Information

Section 3 - Absorptive Filtration

Go-No-Go® Absorptive Cartridges

FIWA Series - Absorptive Cartridges

Clay Treater Cartridges

Carbon / Clay Treater Cartridges - Mounting Arrangements

F Series - Carbon and Clay Treater Housings

Section 4 - All Purpose Housings

21 Series & 22 Series Housings

21 Series Cartridges

22 Series Cartridges

SuperFlex™ Housings

SuperFlex™ Cartridges

Section 5 - Miscellaneous Parts & Accessories

Screw Base Adapter

Standard Cartridge Mounting Hardware

Cartridge Torque Recommendations

Cleaning Procedures - Teflon® Screen and Synthetic Separator Cartridges

Frequently Asked Technical Questions

Definition

Liquid filtration is the removal of solids from liquids by flowing the contaminated liquid through a filter media that will retain the solids and allow only clean product to pass through.

Filtration Function

Using a surface filter medium to remove a volume of solids from a liquid requires that the medium should contain uniform pores smaller than the smallest particle to be removed. It should also be strong enough and possess sufficient area to hold the required volume of solids.
If a depth-type medium is used, the medium must contain an infinite number of small, irregular, continuous passages which give the solids a tortuous path to travel through. A depth medium of proper density will stop essentially all solids above a specified size.
The medium selected must withstand the manufacturer's required maximum allowable pressure drop and provide a margin of safety to cover both inadequate maintenance and line pressure surges commonly found in systems as a result of stops and starts. Facet uses both types of media in its product range.

General Applications

- Removing solids that may damage the aesthetic appearance of a product. Example: Solids in paint, bleach, liquid soaps, vinegar, plastic resin for use in plastic extrusion products.
- Removing solids which could affect chemical reaction of a product. Example: Catalyst fine in a refining process.
- Removing solids that could damage operating equipment. Example: Abrasive contaminant in hydraulic and lubricating oils.
- Removing solids that could affect a finished production item. Example: Contaminant in grinding and cutting oil of production equipment.
- Removing solids that could in some way affect the health of operating personnel. Example: Radioactive waste in primary coolant system on boiling water reactors and clean-up water in water reactor system.

Proper Selection Of Filters

Selection of media and vessel design determine the filter flow rate, dirt holding capacity, particle-size removal in one pass, overall cost of operation and initial investment.

Replaceable cartridge-type filters have wide usage and can be used in most any application. The two most important factors to consider when determining whether to use a replaceable cartridge type filters are the concentration of the solids to be retained by the filter and the required degree of filtration.

Cost Of Filtration

One realistic method of determining the "true cost" of filtration is the cost per pound of solids removed from a liquid. The four factors that make up this "true cost" are:

1. Cost of media (cartridges)
2. Cost of service parts (gaskets, etc.)
3. Cost of maintenance labor
4. Cost of downtime to service or maintain (value of lost production)

By totaling these four factors, determine a unit base as cost per pound, per gallon, per barrel, per year, etc. Although the cost of new equipment may vary, the "true cost" to the user is based on a cost per pound of solids removed. However, the achievement of a specific standard of quality cannot be measured by cost alone and this is the true value of a filter.

Capabilities

Today, more than ever, quality-conscious customers expect, and efficient plant operations dictate, the removal of solid contaminants from liquid products or processes. Filtration of particles too small for the eye to detect is essential to protect and improve quality, assure customer acceptance, prevent malfunctioning of equipment and reduce wear on machinery.

Facet filtration equipment has been designed for easy maintenance. The many easy service features reduce downtime and labor cost in maintaining equipment. These costs are important in evaluating both initial and future operational expenses.

With more than 75 years of constant research, product development and quality controlled production, Facet offers you maximum dependability, quality, innovative engineering and service.

M Series High Efficiency Pleated Paper Filter Cartridges

Facet M Series high efficiency pleated paper filter cartridges are designed to effectively remove solid contaminants such as rust, dirt, scale, granular and other types of solids. These cartridges known as the MP Series high efficiency filter cartridges are constructed to meet the demanding requirements of the industrial filter market.

Media with high efficiencies throughout the life of the cartridges are available in ratings of 0.5 to 75 microns. The filtration of potable liquids is not recommended with this series of filter cartridges.

Facet also offers a MPM Series multimedia, pleated extended area, depth filter cartridge for removing colloidal, slimy, or sludge type solids, as well as extremely fine solids, from process streams. They are available in 0.5, 1, and 2 micron ratings. The combination of multimedia pleated paper fiberglass sheets provides a unique depth filter with a large surface area.

Our pleated paper filter media is made from a variety of natural and synthetic fibers. The fibers are bonded using various resins to provide excellent filtration and solids holding characteristics.

Benefits

- Higher efficiency and longer service life = lower operating costs
- High efficiency cartridge provides superior solids holding capacity
- New spirally wound core reduces cartridge weight resulting in lower freight costs
- All metal components are epoxy powder coated to protect against corrosion
- Gaskets are Buna-N -other materials available upon request
- Available in both self-centering rod mount and screw base
- Available in numerous micron ratings: 0.5, 1, 2, 5, 10, 15, 25, 40, and 75
- Flow direction: Outside to In
- Design collapse pressure: 75 psid (5.17 bar)
- Initial differential pressure: 2 psi (0.14 bar) or less

Applications

- Fuels
- Rolling Oils
- Insulating Oils
- Paints
- Liquid Plastics
- Waxes
- Lube Oils
- Coolants
- Varnishes
- Base Oils
- Solvents (Stoddard Based)
- Petroleum Based and Synthetic Hydraulic Fluids

M Series High Efficiency
Pleated Paper Filter Cartridges

PERFORMANCE SPECIFICATION

SERIES	NOMINAL REMOVAL MICRON								
	0.5	1	2	5	10	15	25	40	75
MPM	•	•	•						
MP	•	•	•	•	•	•	•	•	•

MATERIALS

Filter media options:

0.5 - 2 µm: Multimedia Pleated paper & Fiberglass
5 - 75 µm: Resin Impregnated Pleated Paper

Gasket Materials:

Standard: Buna-N
Optional: Other materials available upon request

Components:

Center Core: Epoxy Powder Coated Spiral Wound Steel
End caps: Epoxy Powder Coated Steel
Outer Body: Perforated Oil Board

Adhesives: Thermoset PVC

FILTER SIZES AND DIMENSIONS

SERIES	DIMENSIONS					
	OD		ID		LENGTH	
	in	mm	in	mm	in	mm
MPMµL	6	152	3 ½	89	14 ½	370
MPµ	6	152	3 ½	89	14 ½	370
MPµL	6	152	3 ½	89	14 ½	370
MPMµLX2	6	152	3 ½	89	28 ¾	730
MPµX2	6	152	3 ½	89	28 ¾	730
MPµLX2	6	152	3 ½	89	28 ¾	730
MPMµLX3	6	152	3 ½	89	43 ¼	1090
MPµX3	6	152	3 ½	89	43 ¼	1090
MPµLX3	6	152	3 ½	89	43 ¼	1090
MPMµLX4	6	152	3 ½	89	57 ¾	1465

µ = Micron Rating

Note: The dimensions are nominal. These are standard sizes. Many other sizes and combinations are available. Please call us for special sizes.

TEMPERATURE / COMPATIBILITY GUIDE

MEDIA	MAXIMUM TEMPERATURE	pH RANGE	PETROLEUM PRODUCTS	CHEMICALS	AQUEOUS SOLUTIONS
Multimedia	240 °F	5 - 9	Excellent	Good	Fair
Pleated Paper	240 °F	5 - 9	Excellent	Good	Fair

CARTRIDGE ORDERING INFORMATION

SERIES	MICRON RATING	OUTER BODY DESCRIPTION	LENGTH	SPECIAL FEATURES
MPM	0.5	L	X2	
MP	5		X3	SB
	0.5, 1, 2, 5, 10, 15, 25, 40, 75	L = Outer Body No designation = No outer body	No designation = 14 ½” X2 = 28 ¾” X3 = 43 ¼” X4 = 57 ¾”	SB = Screw Base V = Viton Gasket J = Non Asbestos Gasket N = Neoprene Gasket

MP SERIES
SINGLE-LENGTH (14 ½") CARTRIDGE FLOW RATES AND EFFECTIVE FILTRATION SURFACE AREA

Micron		0.5		1		2		5		10		15		25		40		75	
Viscosity		Flow	ΔP	Flow	ΔP	Flow	ΔP	Flow	ΔP	Flow	ΔP	Flow	ΔP	Flow	ΔP	Flow	ΔP	Flow	ΔP
ssu	cs	gpm	psi	gpm	psi	gpm	psi	gpm	psi	gpm	psi	gpm	psi	gpm	psi	gpm	psi	gpm	psi
29	1	66	.50	66	.36	66	.28	66	.13	66	.08	66	.04	66	.03	66	.02	66	.01
32	2	66	1.0	66	.73	66	.57	66	.26	66	.18	66	.09	66	.06	66	.04	66	.02
36	3	66	1.5	66	1.1	66	.86	66	.40	66	.27	66	.14	66	.09	66	.07	66	.04
43	5	52	2.0	66	1.8	66	1.4	66	.66	66	.45	66	.23	66	.15	66	.11	66	.07
52	8	32	2.0	45	2.0	57	2.0	66	1.1	66	.73	66	.37	66	.23	66	.18	66	.11
58	10	26	2.0	36	2.0	46	2.0	66	1.3	66	.89	66	.47	66	.29	66	.22	66	.13
98	20	13	2.0	18	2.0	23	2.0	50	2.0	58	1.4	66	.93	66	.58	66	.44	66	.26
140	30	8	2.0	12	2.0	15	2.0	33	2.0	50	1.7	66	1.4	66	.87	66	.66	66	.40
190	40	6	2.0	9	2.0	11	2.0	25	2.0	45	2.0	66	1.9	66	1.2	66	.88	66	.53
230	50	5	2.0	7	2.0	9	2.0	20	2.0	38	2.0	56	2.0	66	1.4	66	1.1	66	.66
342	75	3	2.0	5	2.0	6	2.0	13	2.0	25	2.0	38	2.0	60	2.0	66	1.6	66	1.0
455	100	2	2.0	3	2.0	4	2.0	10	2.0	17	2.0	28	2.0	45	2.0	60	2.0	66	1.3
910	200	1	2.0	2	2.0	2	2.0	5	2.0	8	2.0	14	2.0	22	2.0	30	2.0	50	2.0
1365	300	0.9	2.0	1	2.0	1	2.0	3	2.0	6	2.0	9	2.0	15	2.0	20	2.0	33	2.0
1818	400	0.6	2.0	0.9	2.0	1	2.0	2	2.0	4	2.0	7	2.0	11	2.0	15	2.0	25	2.0
2273	500	0.5	2.0	0.7	2.0	0.9	2.0	2	2.0	3	2.0	5	2.0	9	2.0	12	2.0	20	2.0
Surface Area Square feet		8.6		20.2		23.1		23.1		23.1		23.1		23.1		23.1		23.1	

To determine the double, triple and quadruple-length cartridge flow rates or surface areas, multiply the single-length result by 2, 3 or 4 respectively.

MPM SERIES FLOW RATES

Model		MPM0.5		MPM2	
Micron		0.5		2	
Viscosity		Flow	ΔP	Flow	ΔP
ssu	cs	gpm	psi	gpm	psi
29	1	66	1.4	66	.73
32	2	47	2.0	66	1.4
36	3	31	2.0	60	2.0
43	5	19	2.0	36	2.0
52	8	12	2.0	23	2.0
58	10	9	2.0	18	2.0
98	20	5	2.0	9	2.0
140	30	3	2.0	6	2.0
190	40	2	2.0	5	2.0
230	50	2	2.0	4	2.0
342	75	1	2.0	2	2.0
455	100	0.9	2.0	2	2.0
910	200	0.5	2.0	0.9	2.0
1365	300	0.3	2.0	0.6	2.0
1818	400	0.2	2.0	0.4	2.0
2273	500	0.2	2.0	0.3	2.0

Flow rates are expressed in US Gallons per Minute (GPM).
GPM x 3.785 = Liters per Minute (LPM)

Differential pressure is listed in Pound per Square Inch (PSI).
PSI x .07 = Kilograms per Centimeter Squared (kg/cm²).

CIF Series High Efficiency Pleated Paper Coreless Filter Cartridges

The patented Facet CIF Series high efficiency coreless pleated paper filter cartridges are designed to effectively remove solid contaminants. The filtration of potable liquids is not recommended with this series of filter cartridges.

These cartridges are constructed to meet the demanding requirements of the industrial filter market. Media with high efficiency throughout the life of the cartridge is available in ratings of 0.5 to 25 microns. We recommend replacing cartridges when the differential pressure reaches 15 psi. Effective life above 15 psid is minimal.

To use the CIF Series cartridge requires the one time installation of either a single, double, triple, or quadruple length center tube kit:

- CIF1KIT
- CIF2KIT
- CIF3KIT
- CIF4KIT

Each kit contains all necessary hardware and components required to convert any housing fitted for 6” (152 mm) OD × 3½” (89 mm) ID cartridges.

Benefits

- Crushable-can reduce your disposal volume by approximately 80%
- No metal components
- Flow rates same as “M” Series
- Incinerable-check your local regulations
- Cartridge alignment is executed at top of center tube-easier, quicker
- Lightweight-contributes to reducing change out time
- Same performance and efficiency as M Series high efficiency pleated paper filter cartridges
- Nominal micron: 0.5, 1, 2, 5, 10, 15, 25
- Gaskets are Buna-N -other materials available upon request

Applications

- Gasoline
- Diesel
- Coolants
- Jet Fuel
- Kerosene
- AV-gas
- Rolling Oils
- Lube Oils
- Chemicals and Solvents

CIF Series High Efficiency
Pleated Paper Coreless Filter Cartridges

PERFORMANCE SPECIFICATION

SERIES	NOMINAL REMOVAL MICRON						
	0.5	1	2	5	10	15	25
CIF	•	•	•	•	•	•	•

MATERIALS

Filter media options:

0.5 - 25 µm: High Efficiency Pleated Paper

Gasket Materials:

Standard: Buna-N

Components:

Center Core: None

End caps: Engineered Plastics

Outer Body: Perforated Oil Board

Adhesives: Urethane

FILTER SIZES AND DIMENSIONS

SERIES	DIMENSIONS					
	OD		ID		LENGTH	
	in	mm	in	mm	in	mm
CIF0.5L	6	152	3 ½	89	14 ½	370
CIF0.5LX2	6	152	3 ½	89	28 ¾	730
CIF0.5LX3	6	152	3 ½	89	43 ¼	1090
CIF0.5LX4	6	152	3 ½	89	57 ¾	1465
CIF1L	6	152	3 ½	89	14 ½	370
CIF1LX2	6	152	3 ½	89	28 ¾	730
CIF1LX3	6	152	3 ½	89	43 ¼	1090
CIF1LX4	6	152	3 ½	89	57 ¾	1465
CIF2L	6	152	3 ½	89	14 ½	370
CIF2LX2	6	152	3 ½	89	28 ¾	730
CIF2LX3	6	152	3 ½	89	43 ¼	1090
CIF2LX4	6	152	3 ½	89	57 ¾	1465
CIF5L	6	152	3 ½	89	14 ½	370
CIF5LX2	6	152	3 ½	89	28 ¾	730
CIF5LX3	6	152	3 ½	89	43 ¼	1090
CIF5LX4	6	152	3 ½	89	57 ¾	1465
CIF10L	6	152	3 ½	89	14 ½	370
CIF10LX2	6	152	3 ½	89	28 ¾	730
CIF10LX3	6	152	3 ½	89	43 ¼	1090
CIF10LX4	6	152	3 ½	89	57 ¾	1465
CIF25L	6	152	3 ½	89	14 ½	370
CIF25LX2	6	152	3 ½	89	28 ¾	730
CIF25LX3	6	152	3 ½	89	43 ¼	1090

Note: The dimensions are nominal. These are standard sizes. Many other sizes and combinations are available. Please call us for special sizes.

TEMPERATURE / COMPATIBILITY GUIDE

MEDIA	MAXIMUM TEMPERATURE	pH RANGE	PETROLEUM PRODUCTS	CHEMICALS	AQUEOUS SOLUTIONS
Pleated Paper	240 °F	5 - 9	Excellent	Good	Fair

CARTRIDGE ORDERING INFORMATION

SERIES	MICRON RATING	OUTER BODY	LENGTH	SPECIAL FEATURES
CIF	0.5	L	X3	
	0.5, 1, 2, 5, 10, 15, 25	L = Outer Body No designation = No outer body	No designation = 14 ½” X2 = 28 ¾” X3 = 43 ¼” X4 = 57 ¾”	J = Non Asbestos Gasket N = Neoprene Gasket V = Viton Gasket

CIF Series
Center Tube Kit
INSTALLATION INSTRUCTIONS

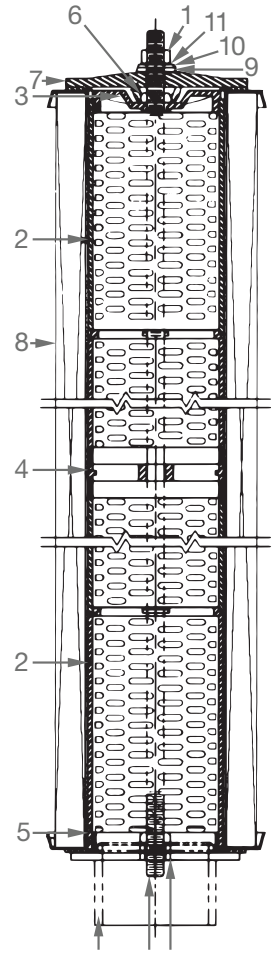

Installation Instructions

To install the CIF Center Tube:

1- Remove existing filter cartridge. NOTE: Leave center rod in position.
2- Identify bottom of center tube. Only the top of center tube will accept top adaptor (3).
3- Place center tube assembly with the bottom guide (5) down making sure it is properly aligned on the existing cartridge adaptor.
4- For kit numbers CIF2, CIF3 and CIF4, be sure to properly align centering guide (4) over center rod.
5- Slide top adaptor (3) over center rod and secure in center tube using jam nut (6) (thinner of two nuts). Tighten to 5 foot pounds (6.78 Nm).

To install the CIF Cartridge:

1- Slide cartridge over center tube. Install NEW black yoke (7) domed head up.
2- Place rubber gasket washer (9) (supplied with filter cartridge) over center rod.
3- Place flat steel washer (10) over rubber gasket washer.
4- Place steel lock washer (11) over flat steel washer and secure to 5 foot pounds (6.78 Nm) with hex nut (1).

PARTS FOR ASSEMBLY

Item	Part Numbers	Description	Quantity			
			CIF1KIT for 14½" cartridge	CIF2KIT for 28¼" cartridge	CIF3KIT for 44" cartridge	CIF4KIT for 57" cartridge
1	606443	Hex nut 1/2" - 13C-2B	1	1	1	1
2	640442	Center tube assembly	1	2	3	4
3	640444	Top adaptor	1	1	1	1
4	640445	Centering guide	0	1	2	3
5	640443	Bottom guide	1	1	1	1
6	606450	Jam nut 1/2" - 13C-2B	1	1	1	1
7	640549	Yoke	1	1	1	1
8		Filter cartridge	*	*	*	*
9		Gasket washer	*	*	*	*
10	6056402	Flat washer	1	1	1	1
11	606705	Lock washer	1	1	1	1

* Indicates parts not included in kit-shown for reference only.

FI Series
Filter Cartridges

Facet FI Series filter cartridges provide efficient and economical filtration of fluids in a wide range of applications. These industrial filter cartridges are used for removal of particulate from a broad range of products where nominal filtration is required.

Facet FI Series filter cartridges provide a large surface area for maximum dirt holding capacity, high flow rates and low initial pressure drops. The normal flow direction is outside to inside, however, specially designed cartridges are available for reverse flow.

FI Series cartridges are manufactured using pleated, resin impregnated cellulose or glass cellulose blended medias that are heat cured for strength and durability. Electro-tin plated center cores and outer bodies are the standard metal components. Cartridges are also available without the outer body. Thermosetting PVC adhesives and Buna-N gaskets are standard.

Benefits

- Resin impregnated medias provide strength and durability in demanding applications.
- Extended surface area for maximum dirt holding capacity and long life.
- One piece construction reduces downtime, cartridges change-out costs and eliminates filter bypass concerns.
- Retention ratings available from 0.5 to 100 microns.
- 90-95% nominal efficiency ratings are standard Higher efficiency cartridges are available.
- Electro-tin plated components help prevent rust and corrosion.

Applications

- Automotive Manufacturing
- Chemicals, Resins, and Solvents
- EDM Machining
- Foundries
- Heating Oils
- Hydraulic Oils
- Hydrocarbons
- Lube Oils
- Petroleum Refining
- Pipelines and Petroleum Terminals
- Power Generation
- Pulp and Paper Industry

FI Series
Filter Cartridges

PERFORMANCE SPECIFICATION

MEDIA	NOMINAL REMOVAL MICRON											
	0.5	1	3	5	10	15	20	30	40	50	75	100
Glass/Cellulose	•	•	•									
Cellulose		•	•	•	•	•	•	•	•	•	•	•

MATERIALS

Filter media options:

0.5-3.0 µm: Resin Impregnated Cellulose/Glass Blend
5 - 100 µm: Resin Impregnated Cellulose

Gasket Materials:

Standard: Buna-N
Optional: Other gasket material available

Components:

Center Core: Electro-tin Plated
End Caps: Electro-tin Plated
Outer Cage: Electro-tin Plated
Adhesives: Thermoset PVC / Urethane / Epoxy

FILTER SIZES AND DIMENSIONS

SERIES	DIMENSIONS					
	OD		ID		LENGTH	
	in	mm	in	mm	in	mm
FI-209-µ	2 ½	63	1 1/16	27	9 7/8	251
FI-209-µ-3	2 ½	63	1 1/16	27	9 11/16	246
FI-229-µ	2 ½	63	1 1/16	27	29 ¼	743
FI-230-µ	2 ½	63	1 1/16	27	29 5/8	752
FI-412-µ	4	102	1 5/8	41	12 ¼	311
FI-511-µ	4 ½	114	1 ¾	44	11	279
FI-518-µ	4 ½	114	1 ¾	44	18	457
FI-518-µ-3	4 ½	114	2 5/8	67	18	457
FI-608-µ	6	152	3 ½	89	8	203
FI-614-µ	6	152	3 ½	89	14 ½	368
FI-618-µ	6	152	3 ½	89	18	457
FI-636-µ	6	152	3 ½	89	36	914
FI-644-µ	6	152	3 ½	89	44	1118
FI-718-µ	6	152	2 5/8	67	18	457
FI-718-µ-1	6	152	2 ¼	57	18	457
FI-718-µ-3	6	152	3 3/16	81	18	457
FI-736-µ	6	152	2 5/8	67	36	914
FI-736-µ-1	6	152	2 ¼	57	36	914
FI-754-µ	6	152	2 5/8	67	54	1372

µ = Micron Rating

Note: The dimensions are nominal. There are many other sizes and combinations, not listed here, that are available. Please call us for assistance with special configurations.

TEMPERATURE / COMPATIBILITY GUIDE

MEDIA	MAXIMUM TEMPERATURE	pH RANGE	PETROLEUM PRODUCTS	CHEMICALS	AQUEOUS SOLUTIONS
Glass/Cellulose	250 °F	4 - 9	Excellent	Good	Good
Cellulose	225 °F	5 - 9	Excellent	Fair	Fair

CARTRIDGE ORDERING INFORMATION

SERIES	DIMENSIONS	MICRON RATING	OUTER BODY DESIGNATION	SPECIAL FEATURES
FI	718	0.5	P	N-1
	See Filter Sizes and Dimensions table	0.5, 1, 3, 5, 10, 15, 20, 30, 40, 50, 75, 100	No Symbol = No Outer Body P = Outer Body	C3 = High Efficiency Glass/ Cellulose H = Handle J = Non Asbestos Gasket N = Neoprene Gasket V = Viton Gasket -1 = Special ID -3 = Hilco Retrofit

FI3739 Series
Filter Cartridges

Facet FI3739 Series filter cartridges provide high efficiency and economical filtration of fluids in a wide variety of applications. These applications include petrochemical, oil and gas, and other related industries.

Facet FI3739 Series filter cartridges are available in several basic types of medias:

- Glass Cellulose
- Cellulose
- Polyester blend

These filter cartridges are 3.75” OD by 2.20” ID and are 38.56” nominal length. They are offered in various micron grades and ratings, which provide absolute micron ratings with Beta >200 at the stated micron rating.

Facet FI3739 Series filter cartridges are manufactured with pleated media, metal end caps with an internal O-ring seal, metal center tube, and a nylon outer sleeve for pleat stability.

This construction allows the cartridge to withstand a differential pressure of 100 psid and temperatures of 275 ˚F. The pleated design offers a large effective surface area from 45-60 square feet, depending on the media and micron size used.

Benefits

- Lifting handle for easy cartridge removal
- Tin plated metal end caps
- Tin plated metal, spiral, perforated center tube
- O-ring seal with a variety of elastomers available
- Nylon mesh outer sleeve
- Pleated medias for high surface area and dirt holding capacity
- Absolute micron ratings: 1-50 micron
- Epoxy adhesives

Replacements for:

- Porous Media
- Pall
- Royal
- and others

FI3739 Series
Filter Cartridges

PERFORMANCE SPECIFICATION

MEDIA	ABSOLUTE REMOVAL MICRON					
	2	5	10	20	30	50
Glass/Cellulose	•	•	•			
Cellulose				•	•	•
Polyester Blend		•	•	•		•

MATERIALS

Filter media options:

2 - 10 µm: Glass Cellulose
20 - 50 µm: Cellulose
5 - 20, 50 µm: Polyester Blend

Gasket Materials:

Standard: Buna-N
Optional: Other gasket material available

Components:

Center Core: Tin Plated, Spiral Perforated Steel Core
End Caps: Tin Plated Steel
Outer Body: Nylon Mesh Sleeve

Adhesives: Epoxy

FILTER SIZES AND DIMENSIONS

SERIES	DIMENSIONS					
	OD		ID		LENGTH	
	in	mm	in	mm	in	mm
FI3739C2A	3 ¾	95	2 1/5	56	38 14/25	979
FI3739C5A	3 ¾	95	2 1/5	56	38 14/25	979
FI3739C10A	3 ¾	95	2 1/5	56	38 14/25	979
FI3739C20A	3 ¾	95	2 1/5	56	38 14/25	979
FI3739C30A	3 ¾	95	2 1/5	56	38 14/25	979
FI3739C50A	3 ¾	95	2 1/5	56	38 14/25	979
FI3739K5A	3 ¾	95	2 1/5	56	38 14/25	979
FI3739K10A	3 ¾	95	2 1/5	56	38 14/25	979
FI3739K20A	3 ¾	95	2 1/5	56	38 14/25	979
FI3739K50A	3 ¾	95	2 1/5	56	38 14/25	979

Note: The dimensions are nominal. There are many other sizes and combinations, not listed here, that are available. Please call us for assistance with special configurations.

TEMPERATURE / COMPATIBILITY GUIDE

MEDIA	MAXIMUM TEMPERATURE	pH RANGE	PETROLEUM PRODUCTS	CHEMICALS	AQUEOUS SOLUTIONS
Glass/Cellulose	250 °F	5 - 9	Excellent	Good	Excellent
Cellulose	250 °F	5 - 9	Excellent	Good	Fair
Polyester Blend	250 °F	5 - 9	Excellent	Good	Fair

CARTRIDGE ORDERING INFORMATION

SERIES	MEDIA	MICRON RATING	SPECIAL FEATURES
FI3739	C	5	A
	C = Glass Cellulose or Cellulose K = Polyester Blend	2, 5, 10, 20, 30, 50	A = Absolute

FIS Series
Filter Cartridges

Facet FIS Series filter cartridges provide efficient filtration of fluids in a wide variety of applications, particularly in water based fluids. This range of reliable filter cartridges is used to remove particulate from a broad range of process streams including water based fluids, chemicals and petroleum based fluids. The high performance filter media used in FIS Series filter cartridges will not soften or pre-maturely plug in water based fluids unlike filter cartridges that use cellulose based filter media.

FIS Series filter cartridges are manufactured using proprietary combinations of polyester and micro-fiberglass filter media to achieve the desired removal rating. The pleated filter media in the FIS Series cartridge is supported by epoxy coated wire to ensure mechanical stability. The use of synthetic and non-woven filter media results in significantly higher dirt holding capacity than similar cartridges that rely solely on cellulose filter media. As a result of their innovative design, FIS Series cartridges deliver higher flow rates at lower initial pressure drops and longer on-stream life cycles when compared to conventional cellulose filter cartridges of equal efficiency.

Electro-tin plated, spiral center cores and electroplated end caps are standard components. Special configurations are available with a rigid outer cage for increased mechanical strength.

Benefits

- Synthetic medias provide high efficiencies, superior strength and durability
- Superior performance in water based fluids, resulting in longer life
- Extended surface area for maximum dirt holding capacity and long life
- One piece construction reduces downtime, cartridge change-out costs and eliminates filter bypass concerns
- Retention ratings available from 0.5 to 40 microns
- Electro-tin plated components help prevent rust and corrosion
- A variety of adhesives and gasket materials offer a wide range of compatibility

Applications

- Amines
- Chemicals, Resins, and Solvents
- Coolants
- Cooling and Process Water
- Glycols and Glycol Solutions
- Hydraulic Oils
- Lube Oils and Seal Oils
- Oil and Water Filtration
- Petroleum Refining Applications
- Power Generation
- Pulp and Paper Industry

FIS Series
Filter Cartridges

PERFORMANCE SPECIFICATION

MEDIA	ABSOLUTE, BETA 75 REMOVAL MICRON											
	0.5	1	3	5	10	15	20	30	40	50	75	100
Polyester / Micro Fiberglass	•	•	•	•								
Polyester					•	•	•	•	•	•	•	•

MATERIALS

Filter media options:

0.5 - 5 µm: Polyester / Micro Fiberglass Combination, Wire Backed

10 - 100 µm: Polyester, Wire backed

Gasket Materials:

Standard: Buna-N

Optional: Vegetable Fiber, Neoprene, Viton® Non-asbestos Replacement

Components:

Center Core: Electro-Tin Plated

End Caps (optional): Electro-Tin Plated

Outer Body (optional): Electro-Tin Plated

Adhesives: Plastisol Two Part Epoxy

FILTER SIZES AND DIMENSIONS

SERIES	DIMENSIONS					
	OD		ID		LENGTH	
	in	mm	in	mm	in	mm
FIS-209-µ	2 ½	63	1 1/16	27	9 7/8	251
FIS-209-µ-3	2 ½	63	1 1/16	27	9 11/16	246
FIS-511-µ	4 ½	114	1 ¾	44	11	279
FIS-518-µ-3	4 ½	114	2 5/8	67	18	457
FIS-618-µ	6	152	3 ½	89	18	457
FIS-636-µ	6	152	3 ½	89	36	914
FIS-718-µ	6	152	2 5/8	67	18	457
FIS-718-µ-1	6	152	2 ¼	57	18	457
FIS-718-µ-3	6	152	3 3/16	81	18	457
FIS-7618-µ	6	152	2 5/8 x 3½	67 x 89	18	457
FIS-736-µ	6	152	2 5/8	67	36	914
FIS-7636-µ	6	152	2 5/8 x 3½	67 x 89	36	914

µ = Micron Rating

Note: The dimensions are nominal. There are many other sizes and combinations, not listed here, that are available. Please call us for assistance with special configurations.

TEMPERATURE / COMPATIBILITY GUIDE

MEDIA	MAXIMUM TEMPERATURE	pH RANGE	PETROLEUM PRODUCTS	CHEMICALS	AQUEOUS SOLUTIONS
Polyester/ Micro Fiberglass	275 °F	3 - 10	Excellent	Good	Excellent
Polyester	275 °F	3 - 10	Excellent	Good	Excellent

CARTRIDGE ORDERING INFORMATION

SERIES	DIMENSIONS	MICRON RATING	OUTER BODY DESIGNATION	SPECIAL FEATURES
FIS	718	0.5	P	H-1
	See Filter Sizes and Dimensions table	0.5, 1, 3, 5, 10, 15, 20, 30, 40, 50, 75, 100	No Symbol = No Outer Body P = Outer Body	H = Handle J = Non Asbestos Gasket N = Neoprene Gasket V = Viton Gasket -1 = Special ID -3 = Hilco Retrofit

MM Series
Screen Wrapped Filter Cartridges

Benefits

- Cleanable and reusable
- High operating temperatures
- Wide range of pH compatibility
- All stainless steel components
- Flow direction: Outside to In

Applications

- Resins
- Waxes
- High Viscosity Fluids
- Caustic Applications

Facet MM Series screen wrapped cartridges are cleanable and reusable stainless steel surface filters for removing solids from liquids, compressed air, and most gaseous fluids.

MM Series screen cartridges are assembled by wrapping layers of stainless steel mesh cloth around a perforated outer support shell. These cartridges are available in micron ratings from 5 to 750. They provide approximately 255 sq. in. (1645 sq. cm.) of effective filtration area. Recommended flow rate is based on specific application.

MM Series
Screen Wrapped Filter Cartridges

PERFORMANCE SPECIFICATION

SERIES	ABSOLUTE REMOVAL MICRON									
	5	10	25	40	75	150	200	250	400	750
MM	•	•	•	•	•	•	•	•	•	•

MATERIALS

Filter media options:

5 - 750 µm: Stainless steel screen

Gasket Materials:

Standard: Non-asbestos

Optional: Other materials available upon request

Components:

Center Core: Stainless steel

End Caps: Stainless steel

Outer Body: None

Adhesives: Solder

FILTER SIZES AND DIMENSIONS

SERIES	DIMENSIONS					
	OD		ID		LENGTH	
	in	mm	in	mm	in	mm
MM5HJS	6	152	3 ½	89	14 ½	368
MM10HJS	6	152	3 ½	89	14 ½	368
MM25HJS	6	152	3 ½	89	14 ½	368
MM40HJS	6	152	3 ½	89	14 ½	368
MM75HJS	6	152	3 ½	89	14 ½	368
MM150HJS	6	152	3 ½	89	14 ½	368
MM200HJS	6	152	3 ½	89	14 ½	368
MM250HJS	6	152	3 ½	89	14 ½	368
MM400HJS	6	152	3 ½	89	14 ½	368
MM750HJS	6	152	3 ½	89	14 ½	368

Note: The dimensions are nominal.

FLOW RATES

Model No.		MM5HJS		MM10HJS		MM25HJS		MM40HJS		MM75HJS		MM150HJS					
Micron		5		10		25		40		75		150		*200	*250	*400	*750
Viscosity		Flow	ΔP	Flow	ΔP	Flow	ΔP	Flow	ΔP	Flow	ΔP	Flow	ΔP				
ssu	cs	gpm	psi	gpm	psi	gpm	psi	gpm	psi	gpm	psi	gpm	psi				
29	1	75	.10	75	.09	75	.05	75	.01	75	.00	75	.00				
32	2	75	.20	75	.18	75	.10	75	.02	75	.00	75	.00				
36	3	75	.30	75	.27	75	.15	75	.03	75	.00	75	.00				
43	5	75	.50	75	.43	75	.25	75	.05	75	.01	75	.01				
52	8	75	.80	75	.70	75	.40	75	.08	75	.02	75	.02				
58	10	75	1.0	75	.87	75	.50	75	.12	75	.03	75	.02				
98	20	75	2.0	75	1.7	75	1.0	75	.24	75	.06	75	.05				
140	30	50	2.0	57	2.0	75	1.5	75	.36	75	.10	75	.08				
190	40	37	2.0	43	2.0	75	2.0	75	.48	75	.13	75	.10				
230	50	30	2.0	34	2.0	58	2.0	75	.60	75	.16	75	.13				
342	75	20	2.0	23	2.0	39	2.0	75	.91	75	.24	75	.20				
455	100	15	2.0	17	2.0	29	2.0	75	1.2	75	.33	75	.26				
910	200	7	2.0	9	2.0	15	2.0	62	2.0	75	.66	75	.53				
1365	300	5	2.0	6	2.0	10	2.0	41	2.0	75	.99	75	.80				
1818	400	4	2.0	4	2.0	7	2.0	31	2.0	75	1.3	75	1.0				
2273	500	3	2.0	3	2.0	5	2.0	25	2.0	75	1.7	75	1.3				

* For all models above 150 microns, the maximum flow rate per cartridge is 75 gpm. Under specified conditions, the flow rate may exceed 75 gpm. Consult the factory for specific applications.

Flow Rates are expressed in U. S. Gallons per Minute (GPM). GPM × 3.785 = Liters per Minute (LPM).
Differential Pressure is listed in Pounds per Square Inch (PSI). PSI × .07 = Kilograms per Centimeters Squared (kg/cm²).

TEMPERATURE / COMPATIBILITY GUIDE

MEDIA	MAXIMUM TEMPERATURE	pH RANGE	PETROLEUM PRODUCTS	CHEMICALS	AQUEOUS SOLUTIONS
Stainless Steel	250 °F	1 - 12	Excellent	Excellent	Excellent

CARTRIDGE ORDERING INFORMATION

SERIES	MICRON RATING	SPECIAL FEATURES	
MM	5	HJ	S
	5, 10, 25, 40, 75, 150, 200, 250, 400, 750	H = Heavy Duty J = Non Asbestos	S = Stainless Steel

M Series
Filter Housings

M Series filter housings use any of Facet's M Series high efficiency filter cartridges. A single pass of product through the system removes solids such as rust, dirt, scale, granules and other particles commonly found in liquid process streams.

M Series filter housings are available in vertical or horizontal configuration in several standard and custom sizes to accommodate specific flow and filtration requirements. They are designed with no internal moving parts to provide easy service and reduced maintenance costs. Each housing is manufactured using quality materials and workmanship to give long-lasting, dependable service.

M Series filter housings can be fitted with either multiple single-length cartridges, stacked 1, 2 or 3 high, or their double-length or triple-length equivalents.

Standard Design Features

- Body: Welded carbon steel construction — other materials available on request
- ASME Code, Section VIII, Div. 1 construction
- Designed for 150 psi @ 250˚F (10.3 bar @ 121 °C) — higher pressure and temperature ratings available on request
- Head closures:
  Style 1, thru-bolt; Styles 2 and 3, swing bolt
- Head gasket: Buna-N o-ring —other materials available on request
- Inlet and outlet permanently marked
- Exterior: Multipurpose prime coated
- Head lift furnished on 20" (508 mm) and larger

Standard Connections

- Inlet and outlet:
  Style 1, 3000# NPT; Styles 2 and 3, 150# RF (ANSI) flanged
- Side and bottom drain: 3000# NPT
- Vent and relief valve: ¾" 3000# NPT
- Pressure gauge: ¼" 3000# NPT

Options

- Air Eliminator
- Differential pressure gauge
- Pressure relief valve
- Manual drain valve
- Interior epoxy coating

SMALLER HOUSINGS AVAILABLE.
SEE All PURPOSE HOUSINGS SECTION

M Series
Vertical Filter Housings

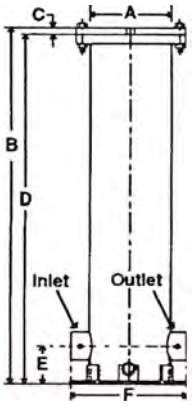

STYLE 1

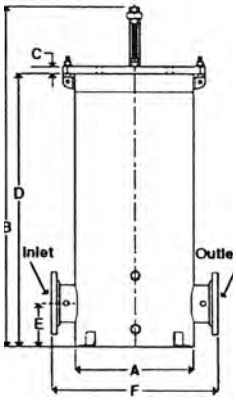

STYLE 2

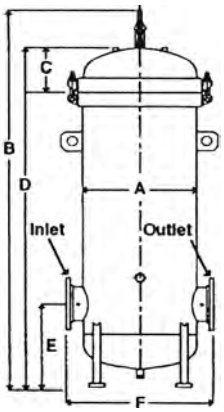

STYLE 3

DATA

MODEL NUMBER	CONNECTIONS						ANCHOR BOLT PLAN					LIQUID VOLUME		WEIGHT WITH CARTRIDGES	
	INLET/ OUTLET		SIDE DRAIN		BOTTOM DRAIN		BOLT HOLE DIAMETER		BOLT CIRCLE		NO. OF BOLT HOLES				
	in	mm	in	mm	in	mm	in	mm	in	mm		gal	ltr	lbs	kgs
1M-114	2	51	NA	NA	¾	19	⅞	22	11 ⅝	295	3	5	19	175	79
1M-214	2	51	NA	NA	¾	19	⅞	22	11 ⅝	295	3	8	30	195	88
1M-314	2	51	NA	NA	¾	19	⅞	22	11 ⅝	295	3	11	42	215	98
2M-314	4	102	¾	19	¾	19	⅞	22	17	432	4	36	136	500	227
3M-314	4	102	¾	19	¾	19	⅞	22	19	483	4	48	182	550	249
4M-314	6	152	¾	19	¾	19	⅞	22	21	533	4	62	235	860	390
6M-314	6	152	¾	19	¾	19	⅞	22	23	584	4	78	295	940	426
11M-314	8	203	1 ½	38	1	25	⅞	22	25 ¼	641	4	175	662	1280	581
18M-314	10	254	1 ½	38	1	25	⅞	22	32 ⅝	829	4	350	1325	1975	896
27M-314	12	305	1 ½	38	1 ½	38	1	25	47 ½	1206	4	540	2044	2840	1288

DIMENSIONS

MODEL NUMBER	DIMENSIONS												HOUSING STYLE	HEAD GASKET
	A		B		C		D		E		F			
	in	mm	in	mm	in	mm	in	mm	in	mm	in	mm		
1M-114	8 ⅝	219	24 ¼	616	¾	19	23 ½	596	4	102	12 ⅜	314	1	691627
1M-214	8 ⅝	219	38 ¾	984	¾	19	38	965	4	102	12 ⅜	314	1	691627
1M-314	8 ⅝	219	54 ½	1378	¾	19	53 ½	1359	4	102	12 ⅜	314	1	691627
2M-314	14	355	62 ¼	1581	1	25	53 ½	1359	6	152	24	610	2	607731
3M-314	14	406	62 ¼	1581	1	25	53 ½	1359	6	152	24	610	2	607731
4M-314	16	406	63 ¾	1619	1	25	55	1397	7 ½	191	26	660	2	609919
6M-314	20	508	73 ¼	1861	1 ¼	32	62 ¾	1594	7 ½	191	28	711	2	609920
11M-314	28	711	99 ¼	2521	11 ¼	286	89 ¼	2267	24	610	36	914	3	601299
18M-314	36	914	106 ¾	2711	14 ¼	362	95 ¼	2419	26	660	48	1219	3	601302
27M-314	42	1067	124 ½	3162	16 ¾	425	98 ¾	2508	29 ½	749	54	1371	3	602209

NOTES:
1. All dimensions, weights, and volumes are approximate and should be used for estimating only.
2. Cartridges are selected separately to fit specific application requirements.
3. Multiple stack cartridges can be replaced with one single-length equivalent. For example: 1M-214 = 1M-128 or 6M-314 = 6M-143, etc.

M Series
Horizontal Filter Housings

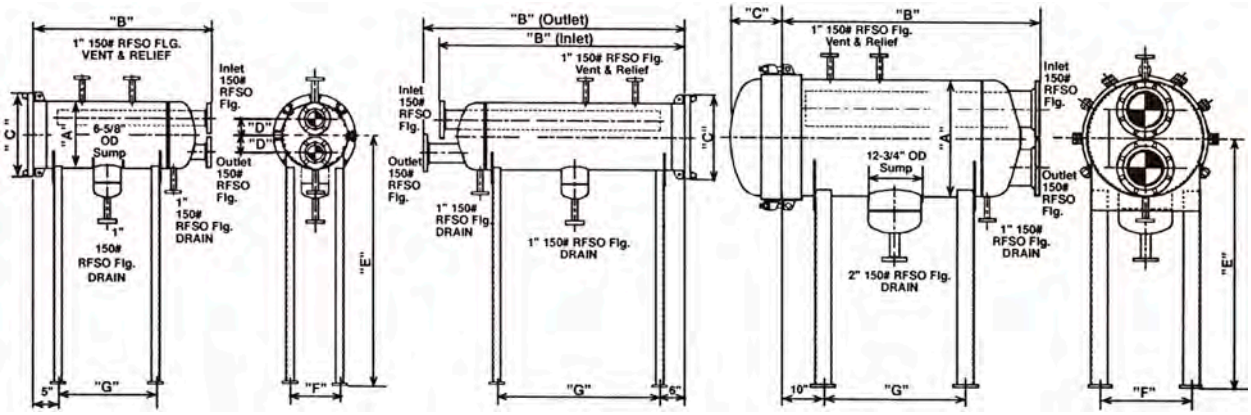

3MH-2 3MH-3 / 6MH-3 11MH-3 / 18MH-3

DIMENSIONS

MODEL NUMBER	INLET / OUTLET		DIMENSIONS													
			A		B		C		D		E		F		G	
	in	mm	in	mm	in	mm	in	mm	in	mm	in	mm	in	mm	in	mm
3MH-214	3	76	16	406	44 3/8	1127	20	508	4	102	60	1524	12	304	24	610
3MH-314	4	102	16	406	Outlet 65 3/8 Inlet 62 3/8	1660 1584	20	508	4	102	60	1524	12	304	40	1016
6MH-314	6	152	20	508	Outlet 66 3/4 Inlet 62 3/4	1695 1594	24	610	5 3/8	137	60	1524	15	381	40	1016
11MH-314	8	203	28	711	63	1600	12 9/16	319	7	178	60	1524	22	559	35	889
18MH-314	10	254	36	914	67	1702	15 13/16	402	9	229	60	1524	28	711	30	889

NOTES:
1. All dimensions are approximate and should be used for estimating only.
2. Cartridges are selected separately to fit specific application requirements.
3. Other size vessels available on request.

Liquid Filtration
Application Information

1. APPLICATION:_____

_____

2. OPERATING CONDITIONS AT POINT OF INSTALLATION:

A. PRODUCT:_____ **B.** SPECIFIC GRAVITY:_____@_____°F

C. FLOW RATE:_____GPM **D.** TEMPERATURE:_____°F.

E. PRESSURE:_____PSIG

F. VISCOSITY:_____SSU CS CP @____°F and____SSU CS CP @____°F

G. CONTAMINANTS: SOLIDS:____(% WT.) (% VOL.) LIQUID:____% VOLUME

H. DESCRIPTION OF SOLIDS:_____

I. PREVAILING PARTICLE SIZE RANGE:_____

J. DESCRIPTION OF LIQUID:_____

K. pH OF LIQUID OR PRODUCT:____TYPE AND % OF CONCENTRATION:____

3. REQUIRED PERFORMANCE EFFICIENCY:

A. DESIRED PARTICLE RETENTION (MICRON):____

B. MAXIMUM ALLOWABLE INITIAL PRESSURE DROP: _____PSID

4. MECHANICAL DESIGN CONDITIONS:

A. DESIGN PRESSURE:____PSIG

B. DESIGN TEMPERATURE:____°F.

C. CORROSION ALLOWANCE:____

D. CODE OR SPECIFICATION:____ASME?____ASME STAMP?____OTHER?

E. FLOW RATE:____GPM

F. MATERIALS OF CONSTRUCTION:_____

G. INLET AND OUTLET CONNECTIONS:

SIZE:____FLANGED ❑ FEMALE NPT ❑ GROOVED ❑ OTHER ❑

H. OTHER CONNECTIONS ON VESSEL:

CONNECTION FOR	SIZE	FLANGED	THREADED
PRESSURE GAUGE	____	❑	❑
RELIEF	____	❑	❑
VENT	____	❑	❑
DRAIN	____	❑	❑

I. SPECIAL DESIGN FEATURES:_____

5. ACCESSORY ITEMS:

A. DIFFERENTIAL PRESSURE GAUGE?____ DIRECT READING?____

WITH DEAD HAND?____ NON-DIRECT READING?____

B. MANUAL VENT VALVE?_____ **C.** PRESSURE RELIEF VALVE?_____

D. MANUAL DRAIN VALVE?_____ **E.** INTERNAL EPOXY COATING?_____

F. AIR ELIMINATOR?_____ **G.** HEAD OPENING DEVICE?_____

6. BECAUSE OF COMPATIBILITY OR OTHER REASONS, DO YOU HAVE ANY PREFERENCE FOR THE FOLLOWING:

HOUSING:
- ❑ CARBON STEEL
- ❑ ALUMINUM
- ❑ STAINLESS
- ❑ OTHER_____

_____

GASKET:
- ❑ BUNA-N
- ❑ VITON A
- ❑ TEFLON®
- ❑ OTHER_____

_____

CARTRIDGE:
- ❑ PAPER
- ❑ SCREEN
- ❑ GLASS FIBER
- ❑ OTHER_____

_____

7. REMARKS:_____

_____

_____

8. INSTRUCTIONS: SUBMIT QUOTATION TO: CUSTOMER ❑ DISTRIBUTOR ❑

ORIGINAL &_____COPIES REQUIRED

CUSTOMER_____

_____

_____

_____

DISTRIBUTOR_____

_____

_____

_____

9. QUOTATION INFORMATION:

NEED QUOTATION—HAVE ORDER FOR PROJECT? YES ❑ NO ❑

WILL ORDER IN: 0-6 MONTHS ❑ LATER ❑

NUMBER OF COMPETITORS QUOTING?_____

In cases where any data is unknown or not available, indicate accordingly.
Facet will contact you if further details are needed.

SUBMITTED BY:_____

_____

_____

_____

FOR:_____

_____

_____

_____

Development of new media and treatment of existing media permit use of these coalescers for essentially all process streams where entrainment of solids and liquid contaminants are present.

Figure 1. A typical two-stage vertical coalescer

Three basic designs of cartridge-type coalescers are available for application in chemical processing. They are comprised of single-stage, two-stage, and three-stage units wherein one, two or three types of cartridges are provided. The configuration of each design will vary with the process application and efficiency requirements.

In determining the design of coalescer to be used, the maximum operating conditions and minimum performance efficiencies must be established. With the performance requirements established, the determination of the basic design and media to be utilized is made. Among the various factors which must be considered in arriving at the correct design are the physical characteristics of the fluid to be processed. This applies not only to the continuous phase but equally well to the discontinuous phase. Since all coalescers, whether one-, two-, or three-stage rely to a greater or lesser degree on the natural forces of gravity, the difference in the specific gravity of the two liquids is important. As will be discussed later, the discontinuous phase may be lighter or heavier than the continuous phase without affecting the efficiency of the unit, provided sufficient differential in gravity exists. Since the natural forces of gravity enter into the operation of the equipment, the viscosity of the fluids being processed must also be taken into consideration.

One of the most important single factors to consider in the design of cartridge type coalescers is the interfacial tension between the continuous and discontinuous phase. Since the interfacial tension controls the maximum droplet size of the discontinuous phase and relative wetting of separating surface, the selection of a coalescing media is of prime importance when low interfacial tension values are to be encountered.

Since most fluid process streams contain solids contamination of one form or another, consideration must be given to the type of contaminant involved and the amount of contaminant in the fluid. The next factor that affects the ultimate design is the particle size distribution. From the particle size distribution curve, a determination of how much of the solids contaminant to be retained in the cartridges can be made. The fact that the solids to be filtered are either hydrophobic or hydrophilic is of importance. If a solid is hydrophobic it will be borne through the system by the hydrocarbon phase and will be more difficult to filter. The hydrophilic solid is carried by the discontinuous water phase and during the mechanical action of coalescence, this solid will largely be deposited on the media of coalescer cartridge.

Coalescer Cartridge

The coalescer cartridge is made up of one or more layers of media. This media is primarily a porous membrane which retains its dimensional stability by the use of thermal setting resins or binders. Careful selection of the media is imperative to insure that the fluid stream being processed does not remove the binder in the media, which would result in media collapse and contamination of the fluid. In order to assure that coalescing of the discontinuous phase is complete, the media must possess an infinite number of irregular continuous passages of very small diameter. These passages are such that by impingement and preferential wetting of the media surface, the discontinuous phase is commingled to a sufficient size where it can be removed from the continuous phase by gravitational force or by contacting a second stage, commonly referred to as a separator cartridge.

Because of the extremely small pore size of the irregular continuous passages of the coalescing media an accessory function of the media becomes one of removing solids particles. Therefore, if a given coalescing media possesses a sufficiently fine pore size to affect coalescing of a finely dispersed discontinuous phase, it will, at the same time, provide excellent filtration

characteristics. The degree of filtration will be in direct relation to the size of the openings and the total solids retention will vary with the type and depth of media used.

One of the most important single factors regarding the application of cartridge-type coalescers to fluid process streams is the interfacial tension between the continuous and discontinuous phase. Below values of 20 dyne/cm, the size of the particles in the dispersed phase becomes progressively smaller and coalescing becomes more difficult. Media is available which will coalesce at values of less than 10 dyne/cm; however, additional consideration must be made for these reduced values. Under these conditions, the media of the coalescer cartridge must have even smaller diameter pores to insure that all of the dispersed phase contacts one or more surfaces during its passage through the media. Preferential wetting of the media by the dispersed phase will facilitate complete coalescing.

Coalescing media is provided in many forms, the most common being multiple layers of media formed into cylindrical cartridges ranging in size from 4 to 6 inches in diameter and 10 to 57 inches in length. The direction of flow can be either outside-to-inside or inside-to-outside. The most common flow pattern in cartridge type coalescers is inside-to-outside. Higher flow rates can be obtained in the inside-to-outside cartridge coalescer due to the fact that the linear velocity of the fluid passing through the media is progressively reduced as the fluid approaches the outer extremities of the cartridge. This condition permits the discontinuous phase to be commingled into a larger droplet size with the result that the load on the second stage is greatly reduced.

Other forms of coalescing media in bulk form are available and are widely used in some applications. Among the more common types of bulk coalescing media are bonded and unbonded glass fibers, metallic wool of various types, and treated wood fibers. Bulk type coalescing media of the types mentioned herein are normally used in single-stage coalescers. The density of the bulk coalescing media will vary with the type of media used in the installation. Typical bulk densities of this type media will range from 1½ to 4 pounds/cubic foot for glass fibers and up to 20 pounds/cubic foot for metal wool.

The degree of coalescing and the nominal pore size of the bulk cartridge can be relatively controlled by the density of the material. Unbonded glass fibers lend themselves to applications wherein the solvent action of the continuous or discontinuous phase prohibits use of bonded materials. Metallic fiber can be used to a great advantage in applications where the pH of the fluid being processed exceeds the limits of glass fibers or other forms of conventional coalescing media. Other forms of coalescing media are also available such as polyethylene encapsulated fibers, inorganic fibers and sintered materials.

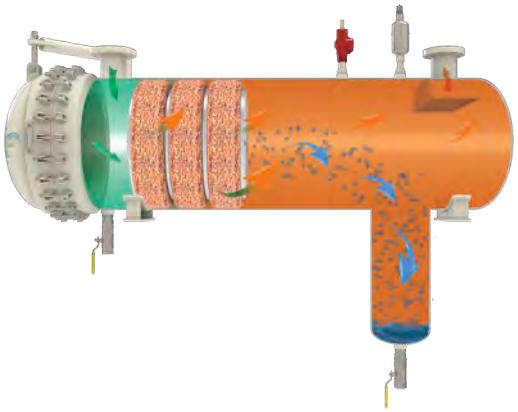

Figure 2. A typical single-stage coalescer

Separator Cartridge

The separator cartridge is made up of a single media. This media must allow free passage of the continuous phase and can be treated to repel the discontinuous phase. The separator cartridge is normally comprised of one type or layer of media. The type of media will vary with the application. The separator media must permit maximum flow of the continuous phase at minimum pressure differential. This media must be superficially treated or possess inherent characteristics which will permit free passage of the continuous phase while repelling the discontinuous phase. A common media for this application is silicone-treated cellulose fibers.

The media must be dimensionally stable in the presence of the fluids being processed since any swelling of the fibers due to absorption will result in a change in the pore size of the media. Effectiveness of the separator cartridge is entirely dependent upon the repellent characteristics of the media to the discontinuous phase and the critical pressure at which the discontinuous phase will be forced through the pores of the media. It is, therefore, of absolute necessity that the pore size of the media remain unchanged; otherwise, the critical pressure differential

will be exceeded and the cartridge will fail to repel the discontinuous phase. Critical rupture pressure can be expressed by the following formula:

$$p = 2\gamma/r$$

where p is the differential pressure (in. Hg), γ is the interfacial tension (dyne/cm), and r is the radius of maximum pore (micron).

Other materials are available for use as a separator media. One of the more common materials is the use of polytetrafluoroethylene coating on fine-mesh wire filter cloth. This particular type of separator cartridge lends itself to those applications where the continuous phase would wash out or otherwise be detrimental to the silicone-impregnated cellulose materials. An auxiliary function of the separator cartridge is one of filtration. Since the pore size of the separator media is controlled, this media then becomes a secondary filter to prevent migration of fibers from the preceding stages; or in the event of mechanical failure of the coalescer cartridge, the separator cartridge will prevent solids contaminant from flowing into the effluent stream.

Filter Cartridge

In three-stage units the first stage is made up of single or multiple installations of one of the various types of filter cartridges. The function of this cartridge is one of removing solids contaminants only. Its purpose is to reduce the loading on the second-stage coalescer cartridge, thereby greatly improving coalescer life and to insure ultimate efficiency from the media. The direction of flow through the filter cartridge is from outside-to-inside. This design permits maximum solids retention in a minimum envelope size.

The selection of media for the filter cartridge will be determined by a number of factors; the most important of which are chemical characteristics of fluid to be processed, temperature, amount of solids contaminants in the process stream, particle size distribution, maximum particle size permitted in effluent, and minimum solids retention before change is required. The cartridge may be made from any of the various common media such as pleated cellulose, woven materials, and impregnated organic fibers. For those applications where the process stream prevents use of bonded or impregnated media due to solvent action, other materials are used. There are now available polyethylene-encapsulated fibers which retain all filtration characteristics of impregnated cellulose with regard to pore size and offer essentially zero media migration. This material now affords economical filtration to numerous process applications which are beyond the operational limits of low cost media.

Two-Stage Unit

A typical two-stage vertical coalescer is shown in Figure 1. This design is commonly referred to as a filter separator.

The contaminated fluid enters the lower inlet chamber and flows upward into the inside of the multiple coalescer cartridges. In this area of reduced velocity, the initial phase of commingling is begun. When the fluid contacts the initial surface of the media, any large particles of contaminant will be filtered from the stream. As the fluid continues its tortuous passage through the media, the discontinuous phase is impinged upon the infinite surfaces and commingling of the dispersed particles results. As the two liquid phases near the outer surface of the coalescer cartridge, the discontinuous phase has been coalesced to large droplets. Simultaneously with coalescing of the discontinuous phase the media is filtering solids contaminant from the process stream.

As the two liquid phases flow from the outside surface of the coalescer cartridge, the large droplets of the discontinuous phase will fall by gravitational force to the sump or collection area. The lower velocity in this area greatly reduces the possibility of rupture of the coalesced droplets of the dispersed phase. Any remaining entrainment of the discontinuous phase will be repelled by the separator cartridge. In addition to preventing any passage of the discontinuous phase into the effluent stream this cartridge also performs as a secondary filter in event of mechanical failure or bypass of the coalescer cartridge.

The two-stage unit is also provided in horizontal configurations. In this design the sump for accumulation of the discontinuous phase may be located below or on top of the horizontal vessel. Normally the coalescer cartridges are installed in one end of the vessel and the separator cartridges in the opposite end. The void area between the ends of the cartridges provide fall-out area for the discontinuous phase. This type of two-stage design is particularly desirable where the viscosity of the fluids being processed is relatively high or where the differential gravity between the two products is relatively low. This design further lends itself to application on streams where

the discontinuous phase is lighter than the continuous phase with the result that the accumulation sump must be installed on the top of the vessel.

Another design of the two-stage unit follows the general configuration of the vertical design wherein the unit is rotated 90 degrees on its normal axis and installed in a horizontal position. The coalescer cartridges are installed in the lower section of the horizontal shell and the separator cartridges are installed in the upper or top section of the horizontal vessel. A vertical accumulator sump for collection of the discontinuous phase is added to the horizontal chamber.

Two-Stage Unit Application

Typical of a two-stage coalescer installation is the following:

Process problem: Removal of undissolved water containing hydrochloric acid from perchloroethylene.

Operating conditions:

Required performance: Nominal size of effluent solid particle five microns. Effluent stream to contain not more than 5 ppm undissolved water.

	Heavy Phase	Light Phase
Feed Rate lb./hr.	112,000	10,000
Specific gravity	1.6	1.0
Liquid	Perchloroethylene	Water
pH		5.0
Temperature, °F		122
Pressure, lb./ sq. in. gauge		150

For this installation a horizontal two-stage unit using multiple coalescer and separator cartridges was used. This design was selected primarily because the discontinuous water phase is lighter than the continuous phase. A second important factor in selection of this design was the high concentration of water in the process stream. The settling area between the two stages permits the major portion of the water to rise to the accumulator sump before reaching the separator cartridges.

The physical and chemical characteristics of the continuous phase permitted use of conventional coalescing and separating media. The hydrochloric acid dissolved in the water phase had reduced the pH to five which is within normal operating limits of glass fibers used in the coalescer cartridges and silicone treated cellulose in the separator cartridges. The operating temperature was considerably less than the 275°F permitted for this type of media.

All metal in contact with the process fluid was of stainless steel and all non-metallic parts are resistant to the corrosive action of the hydrochloric acid solution.

Single-Stage Unit

A typical single-stage coalescer is shown in Figure 2. Single-stage units may be comprised of multiple installation of coalescer cartridges as illustrated, or the entire cross section of the vessel may be packed with a bulk-type media. This design is used when the differential in specific gravity of the two liquid phases is sufficient to provide separation by gravitational force or where a separator cartridge would not possess sufficient repellent characteristics to the discontinuous phase.

In the design of single-stage units, the size of the vessel is of prime consideration since separation is entirely dependent upon the difference in the density of the two liquids. Linear velocity in the settling area of the vessel will vary from 0.25 ft/sec on light fluids to 0.10 ft/sec on heavier products. If the discontinuous phase is lighter than the continuous phase the accumulator chamber is placed on top of the vessel.

The contaminated fluid flows into the large inlet chamber and the immediate reduction in velocity will permit a portion of the entrained discontinuous phase and solids to settle out. The discontinuous phase will then pass through the lower half of the coalescer pack. Any remaining entrainment is coalesced and solids are filtered from the fluid as it flows through the media.

Single-Stage Unit Application

Typical of a single-stage coalescer installation is the following:

Process problem: Removal of entrained water containing sodium hydroxide from butadiene.

Operating conditions: Specific gravity 0.628 at 60°F. Flow 200 gpm Entrained water 10% volume; pH of water 9.5 to 10.0. Solids contaminant negligible.

Required performance: Water not to exceed 50 ppm in effluent. For the above installation a single-stage horizontal unit using a bulk-type coalescer cartridge was used. The design was selected because the pH value of

the water phase exceeds the recommended values for secondary separator cartridges of conventional media. The media selected was a fine grade stainless steel wool compressed to an optimum density to provide maximum contact surface for coalescing and minimum differential pressure.

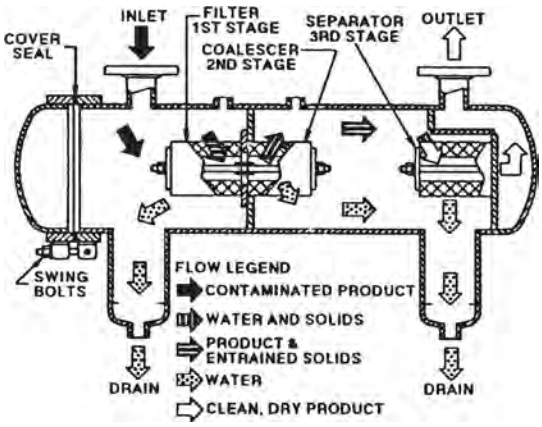

Figure 3. A typical three-stage horizontal coalescer

Three-Stage Unit

A typical three-stage horizontal coalescer is shown in Figure 3. This unit consists of coalescer and separator cartridges as used in the horizontal two-stage device, and is provided with a first-stage cartridge whose primary function is the removal of solids contaminant from the stream. The product enters the low-velocity inlet chamber where the larger particles of solids contaminant will settle out by gravitational force. In this area, any sludge or other heavy entrainment will also settle out and accumulate in an auxiliary sump. Controls may be provided on the auxiliary sump for automatic blowdown of the accumulated material. As the fluid flows through the first-stage filter cartridge, the solids contaminant is filtered from the stream. Simultaneously, some initial coalescing of the discontinuous phase may occur depending upon the media used in the filter cartridge and the characteristics of the discontinuous phase.

As the filtered product and discontinuous phase flows from the first-stage filter cartridge, it is discharged directly into the inside of the second-stage coalescer cartridge. The second-stage coalescer cartridge then performs the function of completing the coalescing of the discontinuous phase and filtering out any remaining solids which may be in the stream. Immediately downstream from the coalescer cartridge is a void area which provides settling space for gravitational fallout of the discontinuous phase. As the product flows to the outlet through the third-stage separator cartridge any remaining entrainment of the coalesced discontinuous phase is repelled and the clean, dry product leaves the vessel.

Use of a three-stage device permits a very wide selection of filter and coalescing media. This unit offers great advantages for those installations where the solids contaminant in the process stream is relatively high, i.e., 5 mg/l. The first stage filter cartridges can be removed from the unit without disconnecting any of the piping or without removing the cartridges in the second- or third-stages.

Application

The use of cartridge-type coalescers, as applied to the chemical process industry, has resulted from the development of new media and treatment of existing media to permit their use. The art of coalescing has advanced to a point where there are only a few isolated process systems where cartridge-type coalescers cannot be utilized.

Cartridge-type coalescers can be provided for essentially all process streams where entrainment of solids and liquid contaminant is present, the only limiting factors being equal density of the two liquid phases or essentially zero interfacial tension.

Coalescer and Separator Cartridges
General Description

Facet coalescer and separator cartridges are mechanical devices to filter solids and separate two immiscible liquids. The most common uses are the filtration and separation of water from aviation fuel, hydrocarbons, process streams, fuel oil, diesel, and various types of oil.

How They Function

In order to provide efficient coalescing of an aqueous discontinuous phase, the media used in the coalescer cartridge must contain an infinite number of small, continuous, irregular passages of a very small diameter. As the continuous phase passes through the media, the discontinuous phase is broken out by impingement, generally in the form of minute particles. As the particles pass through the entire depth of the media, they commingle or coalesce into discrete droplet size, capable of settling due to gravity.

Because coalescing requires a depth media with small irregular passages, it is also an excellent filter media for removing solids. A coalescer capable of producing water removal will also remove solids as low as 1 micron. If less efficient filtration is desired, the coalescing will also be less efficient.

The function of the separator cartridge in the second-stage (in a two-stage design) is to provide a hydrophobic membrane so the discontinuous phase droplets are repelled if they do not completely settle out by gravity, and to act as a secondary barrier to solids. A cylindrically wrapped separator cartridge is available in a Teflon® coated 200 mesh monel screen to provide hydrophobic separation. Screen cartridges will remove solids down to 50 microns. The pleated paper separator cartridges have been treated to repel water and are capable of removing solids down to 5 microns.

Selection Criteria

In selecting the media for the desired degree of separation, the chemical properties, operating temperature, volume of the discontinuous phase and allowable initial differential pressure must all be considered.

Further, a filter separator housing is durable and can last for many years. In making a selection, it is important to consider future needs. Undersized or marginally sized housings may not provide the user with the option to update performance by a simple change in coalescer or separator cartridge media. The slightly higher initial investment in a larger housing can be offset by future demands for increased performance.

A two-stage filter separator should be used where the highest degree of water removal is required. A typical application is the removal of water from jet fuel prior to aircraft fueling. Other typical applications include the removal of water from various process streams prior to distribution.

A single-stage filter separator is used where less efficient water and solids removal is required or where the processed fluid is not compatible with the second-stage separator cartridge. Typical applications are the removal of gross water at an intermediate process stage prior to further refinement.

Cost of Filtration Separation

Through many years of experience, it has been found that the most realistic method of determining the true cost of filtration is based on the cost per unit of product processed. There are four factors which make up the true cost of filtration separation:

1. Cost of media (cartridges, etc.)
2. Cost of service parts (gaskets, etc.)
3. Cost of maintenance labor
4. Cost of downtime to service or maintain (value of lost production)

By totaling these factors, filtration costs may be determined for various unit bases such as cost per pound, per gallon, per barrel, per year, etc. While cost of new equipment may vary, the true cost to the user is based on the cost per unit processed.

General

A variety of Facet coalescers are available, each designed to meet a specific need. These cartridges are the result of more than 75 years of researching the separation of immiscible liquids.

Experience has proven that no one individual cartridge media arrangement can meet all applications for refineries, petrochemical plants, bulk storage terminals, diesel and fuel oils, turbine fuels, and lube oils.

Facet has developed many different coalescer cartridges specifically designed to give proven performance in applications at sea, terminals, offshore drilling, power plants, refineries, petrochemical plants, truck stops, marinas and manufacturing plants.

The breadth of this experience has taught us that coalescer cartridges must have good basic engineering, dedicated production equipment and tight quality control by qualified personnel to meet demanding use. Coalescer cartridges are made to perform a specific task and most industrial applications can be handled with one of the standard or specialized categories.

Flexibility

With the exception of the EB Series single-stage coalescer, all of the coalescer cartridges may be used with companion separator cartridges or as a single-stage. (Performance efficiency, when used as a single-stage, is predicated on the specific operating conditions.) All cartridges, in comparable lengths are dimensionally interchangeable, adding greatly to housing flexibility for varied use.

Standard Categories

- **2 Micron**
  CR Series cartridges are fine filters for solids retention and water removal. They have wide industrial applications including process industries, turbine lube oils, turbine fuels and bulk storage terminals.
- **5 Micron**
  CB Series cartridges are for solids retention and water removal where fine filtration is not required. They are widely used in the refining and petrochemical industries.
- **25 Micron**
  CC Series cartridges are medium filters for solids retention and water removal. They are designed for general industrial applications where exacting performance is not required.

Specialized Categories

- **15 Micron Caustic**
  CMP Series cartridges are specialized filters for solids retention and water removal. They are designed specifically for the refining process where removal of aqueous or caustic solution is required.
- **1 to 50 Micron Emulsion Breaker**
  EB Series cartridges are for solids retention and oil removal from water. They can be used in a variety of applications including marine, petroleum, transportation, power generation and industrial.
- **10 Micron Aromatic**
  U5 Series cartridges are designed for solids retention and water removal from aromatics.

Description

Facet industrial coalescer cartridges provide efficient and economical filtration and coalescence of fluids in a wide range of applications where EI certification is not required. This broad range of liquid/liquid coalescers provides greater coalescing efficiency and contaminant holding capacity than most conventional coalescers or other separation techniques. As a result, Facet industrial coalescers improve product quality, reduce maintenance costs and help prevent unscheduled shutdowns.

Facet industrial coalescer cartridges are manufactured using proprietary combinations of high performance filter media. Years of research and development in phase separation technology has enabled Facet to develop a very broad range of filter grades to meet the stringent requirements of industrial applications.

Facet industrial coalescer cartridges are available in numerous configurations to replace most conventional coalescing cartridges. In addition, Facet can develop special configurations to meet specific applications requirements.

Benefits

- High Performance filter media provides effective particle removal and coalescence in a wide range of applications
- Proprietary design provides superior performance when compared to conventional coalescing cartridges
- Continuous lengths minimize process downtime, reduce cartridge change-out costs and eliminate filter bypass concerns
- Retention ratings available from 1 to 25 microns
- 90-95% nominal efficiency solids removal ratings. Water removal efficiency is by series
- Coated components are available as standard options
- 75 psid burst strength permits use in demanding applications

Applications

- Chemicals, Resins, and Solvents
- Hydraulic Oils
- Hydrocarbons
- Petroleum Refining
- Pipelines and Petroleum Terminals
- Power Generation
- Pulp and Paper Industry
- Transformer Oils
- Turbine Oils

Industrial Coalescer Cartridges

PERFORMANCE SPECIFICATION

SERIES	NOMINAL PARTICULATE MICRON						
	1	2	5	10	15	20	25
CR		•					
CB			•				
CC							•

FREE WATER REMOVAL SPECIFICATIONS

SERIES	PPM FREE WATER, LESS THAN				
	5	10	15	20	40
CR		•	•	•	•
CB			•	•	•
CC				•	•

MATERIALS

Filter media options:

2 - 25 µm: CR, CB, CC Series: Combination of Fiberglass and Cellulose Medias with Outer Sock

Gasket Materials:

Standard: Buna-N

Optional: Vegetable Fiber, Neoprene, Viton®, Non-asbestos Replacement

Metal Components:

Standard: Powder Coated Epoxy Components

Adhesives: Thermoset PVC
Urethane (optional)
Epoxy (optional)

FILTER SIZES AND DIMENSIONS

SERIES	DIMENSIONS					
	OD		ID		LENGTH	
	in	mm	in	mm	in	mm
Cz11	6	152	3 ½	89	11 ¼	286
Cz14	6	152	3 ½	89	14 ½	368
Cz22	6	152	3 ½	89	22 ¼	565
Cz28	6	152	3 ½	89	28 ¾	730
Cz28-SB	6	152	3 ½	89	29	737
Cz33	6	152	3 ½	89	33 ¼	845
Cz33-SB	6	152	3 ½	89	34	864
Cz43	6	152	3 ½	89	43 ¼	1099
Cz43-SB	6	152	3 ½	89	45	1143
Cz56	6	152	3 ½	89	56 ¼	1429
Cz56-SB	6	152	3 ½	89	57	1448

Z = Series designation

Notes:

1. The dimensions are nominal. There are many other sizes and combinations, not listed here, that are available. Please call us for assistance with special sizes and deliveries.

2. Water removal ratings are based on kerosene type fuel, S.G.O.78 and viscosity of 33 SSU at 70°F and recommended flow rates. Removal efficiencies will vary with S.G. viscosity, temperature, and flow rate. Please call us for exact sizing and removal ratings

TEMPERATURE / COMPATIBILITY GUIDE

SERIES	MAXIMUM TEMPERATURE	pH RANGE	PETROLEUM PRODUCTS	CHEMICALS
CR, CB, CC	240 °F	5 - 9	Excellent	Good

CARTRIDGE ORDERING INFORMATION

SERIES	DIMENSIONS	END CONFIGURATION	MICRON RATING	SPECIAL FEATURES
CB	28	SB	5	
CB, CR, CC	See Filter Sizes and Dimensions Table	SB = Screw Base No symbol = Double Open End	1, 2, 5, 10, 15, 20, 25	No Symbol = Buna-N J = Non-Asbestos Gasket N = Neoprene Gasket V = Viton Gasket

Oil Water Cartridges
EB Series

Facet EB Series coalescer cartridges are for removing oil from water. Using a variety of media, these coalescer cartridges use the principle of mechanical impingement and preferential wetting to break any mechanical emulsion of oil and water. Using the force of gravity, the lighter liquid (oil) rises to the top of the vessel where it can be drawn off and the water flows to the bottom of the vessel and out the outlet connection.

Benefits

- pH range from 5 to 9
- Multi-layered media for solids holding
- Solids removal as specified
- Removes oil down to 5 ppm
- Balanced flow characteristics
- Self-centering rod mount and screw base type available
- Recommended maximum operating temperature: 240 °F (115 °C)
- Maximum differential pressure: 75 psi (5.17 bar)
- Flow direction: Inside to out

Applications

Marine

- Bilge & Ballast water
- Ship building and repair yards
- Commercial marine ports

Petroleum

- Stormwater from bulk storage
- Tank bottom condensate
- Refinery wastewater

Transportation

- Railroad yard maintenance and washing
- Truck loading terminals
- Airport fuel storage and maintenance

Power Generation

- Boiler feed water
- Cooling water
- Floor drains in turbine rooms
- Fuel storage stormwater runoff

Industrial

- Petrochemical plants
- Steel mills
- Manufacturing plants
- Boiler feed water

PERFORMANCE SPECIFICATION

SERIES	DIMENSIONS				FLOW RATE		MICRON RATING	COMMENTS
	OD		LENGTH					
	in	mm	in	mm	in	mm		
EB-11	6	152	14 ½	360	10	38	50	
EB-11CG	6	152	11 ¼	280	10	38	50	Used by U.S.C.G.
EB-11CG2	6	152	22 ½	554	20	76	50	Used by U.S.C.G.
EB-12	6	152	14 ½	360	10	38	1	
EB-12-1	6	152	14 ½	360	10	38	5	
EB-12CG1	6	152	11 ¼	280	10	38	5	Used by U.S.C.G.
EB-12CG2	6	152	22 ½	554	20	76	5	Used by U.S.C.G.

Note: Screw base available upon request.

CC-U5-2DP
Aromatic Coalescer Cartridges

Standard Design Features

- Solids removal: 10 micron
- Water removal down to 10 ppm
- Recommended maximum operating temperature: 300 °F (149 °C)
- pH range from 1 to 9
- Balanced cartridge flow characteristics
- Self-centering rod mount
- Maximum differential pressure: 75 psi (5.17 bar)
- Flow direction: Inside to out
- Recommended flow rate: 10 gpm (378 lpm) per 14" cartridge length

Facet CC-U5-2DP Series coalescer cartridges are designed for removing free and entrained water from BTEX compounds –xylene, benzene, toluene and ethylbenzene, or removing BTEX compounds from water. When removing water, a two-stage housing using Facet's synthetic separator cartridges as the second stage will greatly improve efficiency. When removing BTEX compounds from water, use the CC-U5-2DP in a single-stage housing.

This coalescer cartridge is constructed of a single piece fiberglass tube, stainless steel metal components and non-asbestos gaskets. It is 6" (152 mm) OD, by 3½" (89 mm) ID by 14½" (370 mm) long which makes it interchangeable with most 6" (152 mm) OD coalescer cartridges.

Note: Other lengths are available.

Description

Facet industrial separator cartridges provide efficient separation of water in a wide range of fluid process streams. These high performance liquid/liquid separators are used in applications where EI certification is not required. The use of Facet industrial separator cartridges instead of conventional liquid/liquid separators can help reduce operating costs and improve product quality.

Facet industrial separator cartridges are manufactured using proprietary combinations of high performance filter media and pleat configurations. Facet has developed continuous length separator cartridges to retrofit most commercially available single length separators.

The use of continuous length separators minimizes process downtime, reduces cartridge change-out costs and eliminates filter bypass concerns.

Generally, the pleated paper configuration is considered the best general purpose separator having an extended surface area and being changed simultaneously with its companion coalescer. Selection must be based on the physical and chemical properties of both phases. As in the case of coalescer cartridges, separator cartridges may be used in most finished petroleum products, but caution must be exercised in compatibility of not only the media, but adhesives, metal parts and gaskets.

Pleated paper separators provide a 5 micron filtration barrier. It is also offered in a 25 micron.

Teflon separators provide a 74 micron filtration barrier.

Synthetic separators provide a 50 micron filtration barrier.

Both Teflon and synthetic separator cartridges can be cleaned and reused in accordance with Facet procedures.

Facet is continually working with customers to optimize separator performance. Facet industrial separator cartridges are available in numerous configurations to replace most conventional coalescing cartridges. Facet can develop special configurations to meet specific applications requirements.

Benefits

- Proprietary filter media provides a high performance in a wide range of applications
- Continuous lengths minimize process downtime, reduce cartridge change-out costs and eliminate filter bypass concerns
- Designed for balanced flow through cartridge
- Electro-tin plated components help prevent rust and corrosion. Coated components are available as standard options
- Synthetic, plated, or coated end caps available

Applications

- Chemicals, Resins, and Solvents
- Hydraulic Oils
- Hydrocarbons
- Petroleum Refining
- Pipelines and Petroleum Terminals
- Power Generation
- Pulp and Paper Industry
- Transformer Oils
- Turbine Oils

Industrial Separator Cartridges

PERFORMANCE SPECIFICATION

SERIES	NOMINAL PARTICULATE MICRON			
	5	25	50	74
SP	•	•		
SS			•	
ST				•

MATERIALS

Filter media options:

SP Series: Silicone Treated, Pleated Paper
SS Series: Synthetic Hydrophobic Mesh
ST Series: Teflon® Coated Screen

Gasket Materials:

Standard: Buna-N
Optional: Vegetable Fiber, Neoprene, Viton®, Non-asbestos Replacement

Metal Components:

Standard: Electro-tin Plated Components
Optional: Powder Coated Epoxy Components

Adhesives: Thermoset PVC, Urethane, Epoxy

FILTER SIZES AND DIMENSIONS

SERIES	DIMENSIONS			
	OD		LENGTH	
	in	mm	in	mm
Sz611FB	6	152	11 ¼	286
Sz611FD	6	152	11 ¼	286
Sz614FB	6	152	14 ½	368
Sz614FD	6	152	14 ½	368
Sz616FD	6	152	16 ¼	413
Sz622FB	6	152	22 ¼	565
Sz622FD	6	152	22 ¼	565
Sz629FB	6	152	28 ¾	730
Sz629FD	6	152	28 ¾	730
Sz633FB	6	152	33 ¼	845
Sz633FD	6	152	33 ¼	845
Sz636FB	6	152	36	914
Sz636FD	6	152	36	914
Sz640FB	6	152	40	1016
Sz640FD	6	152	40	1016
Sz644FB	6	152	44	1118
Sz644FD	6	152	44	1118
Sz648FB	6	152	48	1219
Sz648FD	6	152	48	1219
Sz656FB	6	152	56	1422
Sz656FD	6	152	56	1422

Z = Series designation

TEMPERATURE / COMPATIBILITY GUIDE

SERIES	MAXIMUM TEMPERATURE	pH RANGE	PETROLEUM PRODUCTS	CHEMICALS
SP	240 °F	5 - 9	Excellent	Fair
SS	240 °F	5 - 9	Excellent	Good
ST	240 °F	5 - 9	Excellent	Good

SEALING & MOUNTING END CONFIGURATIONS

DESIGNATION	INSIDE DIAMETER			
	SEALING END		MOUNTING END	
	in	mm	in	mm
FB FD	17/32	13	3 ½	89
	3 ½	89	3 ½	89

Note: The dimensions are nominal. These are standard sizes. There are many other sizes and combinations, not listed here, that are available. Please call us for assistance with special configurations.

CARTRIDGE ORDERING INFORMATION

SERIES	DIMENSIONS	FLOW TUBE	END CONFIGURATION	SPECIAL FEATURES
SS	611	F	D	N
SS, SP, ST	See Filter Sizes and Dimensions Table	F = Flow Tube	See Sealing & Mounting End Configuration Table	No Symbol = Buna-N C = 25 micron (paper only) J = Non-Asbestos Gasket K = Tin Steel Components N = Neoprene Gasket V = Viton Gasket

Single-stage separation by use of packed mass media is generally used for hydrocarbons of lighter specific gravities and process streams where the removal of water and solids is of vital importance.

Separation is first started when the liquid enters the vessel. Due to the substantially reduced velocity, free water starts to fall out by gravity. As it progresses through the mass packed media, further separation occurs by impingement of the water droplets on the media. At the same time, solids tend to fall out as the liquid enters the vessel at reduced velocity but are further removed by filtration as the flow continues through the mass media.

Settling zones permit a natural separation of water due to the difference in the specific gravities of the two phases.

Mass packed coalescing media are available in various styles and materials. Selection is based on the condition of the liquid as to temperature, acidity and specific gravity. A second criterion is the efficiency of water and solids removal desired. Heavy solids or certain types of solids will tend to either blind off the surface of the media and/or compress them to the point that they will no longer function as a coalescer.

In the event solids are expected to be moderate to heavy (in excess of 5 ppm), consideration should be given to using the wafer type. This type permits change out of the first or second upstream wafers, which may contain a heavy load of solids, while the third and successive downstream wafers are relatively free of solids and still effective coalescers.

The outside diameter of all repacks is sized to the inside diameter of the vessel. Thus, each repack is personalized to the vessel. Further, densities will vary depending upon the media used.

Cylindrical Repacks

This cylindrically packed cartridge is for use as a coalescer medium for light hydrocarbons or as strainers on most petroleum products. They are available in selected Aspen wood excelsior, glass fibers, carbon steel or Type 430 steel wool.

Wafer Repacks

The wafer packed cartridge is for use as a coalescer or as a strainer where heavy solids loads are expected or where solids tend to blind off the face without affecting the remaining 75% - 80% of the cartridge. They are available in selected Aspen wood excelsior, glass fibers, carbon steel or Type 430 steel wool.

Combination Repacks

Combination repacks are for use in process streams where the following conditions may be found; sulfuric acid concentrations as high as 80% - 90%, aqueous solutions with pH from 1 to 9 and temperatures up to 350 °F (176 °C). They are available with alternate layers of glass fiber bat material and Type 430 metal mesh spacers to prevent excessive compression due to high solids loads.

Two-Stage Vertical Coalescer Separator Housings

VCS Series

Facet VCS Series two-stage vertical coalescer separator housings are mechanical devices designed to filter solids and separate two immiscible liquids. Using Facet's first-stage coalescer cartridges and second stage separator cartridges, they provide the highest degree of water and solids removal available.

These quality Facet products are designed for installations in petrochemical plants, refineries, power plants, bulk storage terminals, offshore platforms, manufacturing plants and many other industrial applications.

Standard Housing Designs

- Body: Welded carbon steel construction — other materials available by request
- ASME Code, Section VIII, Div. 1, stamped and certified
- Designed for 150 psi @ 250 °F (10.34 bar @ 121 °C) — higher pressures and temperatures available by request
- Inlet and outlet permanently marked
- Exterior: Prime coated
- Swing bolt head closures
- Head Gasket: Buna-N o-ring —other materials available by request
- Head lift furnished on 18" (457 mm) OD and larger

Standard Connections

- Inlet and outlet: 150# RF (ANSI) flanged
- All other connections are 3000# NPT couplings

Options

- Automatic air eliminator
- Differential pressure gauge
- Immersion heaters
- Liquid level gauge
- Pressure relief valve
- Sampling probe
- Special connections available
- Drain valves
- Blind cover for pilot control mounting flange
- Interior epoxy coating

Two-Stage Vertical Coalescer Separator Housings

VCS Series

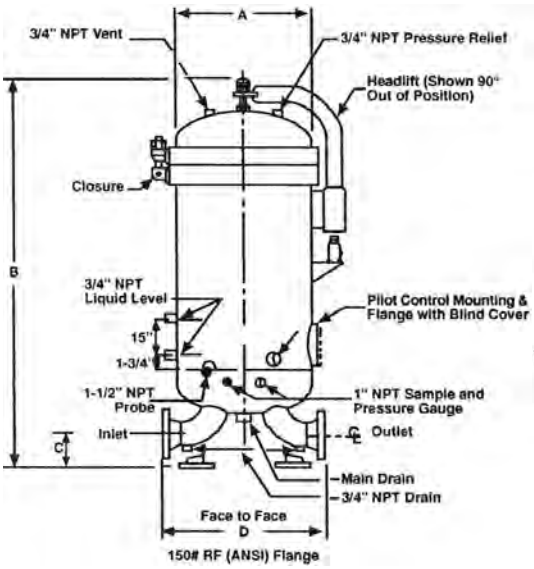

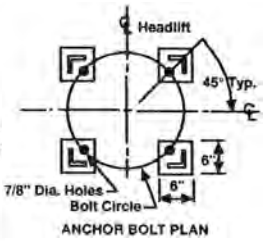

DIMENSIONS

MODEL NUMBER	HEAD STYLE	CONNECTIONS				DIMENSIONS								DRY WEIGHT W/ CTGS.		HOUSING LIQUID VOLUME		GASKET PART NUMBER
		INLET / OUTLET		MAIN DRAIN		A		B		C		D						
		in	mm	in	mm	in	mm	in	mm	in	mm	in	mm	lbs	kgs	gal	ltr	
VCS-222-122	Flat	2	51	1	25	16	406	51 5/8	1311	6	152	17	432	600	272	34	129	609919
VCS-243-222	Flat	3	76	1	25	18	457	76 5/8	1946	6	152	23	584	700	318	58	220	697181
VCS-328-222	Flat	3	76	1	25	20	508	63 5/8	1616	6	152	23	584	750	340	60	227	609920
VCS-343-228	Flat	4	102	1	25	20	508	77 ¾	1975	6	152	28	711	845	383	78	295	609920
VCS-443-328	Flat	4	102	1	25	24	610	80	2032	6	152	28	711	995	451	110	416	694956
VCS-456-428	Flat	6	152	1	25	24	610	96 3/8	2448	7 ½	191	36	914	1050	476	137	519	694956
VCS-643-428	Flat	6	152	1	25	26	660	85 ¼	2165	7 ½	191	37	940	1100	499	132	500	678775
VCS-743-433	Dome	6	152	1	25	28	711	93 7/8	2384	7 ½	191	36	914	1300	590	165	625	676384
VCS-656-533	Dome	6	152	1 ½	38	28	711	107 5/8	2734	7 ½	191	36	914	1375	624	200	757	676384
VCS-843-533	Dome	6	152	1 ½	38	30	762	95 ¼	2419	7 ½	191	36	914	1450	658	195	738	691977
VCS-1043-633	Dome	8	203	1 ½	38	34	864	99 3/8	2524	9	229	48	1219	1950	885	250	946	604459
VCS-856-733	Dome	8	203	1 ½	38	32	813	113 ½	2883	9	229	46	1168	1850	839	265	1003	697801
VCS-1243-733	Dome	8	203	1 ½	38	36	914	101 3/8	2575	9	229	48	1219	2150	975	290	1098	678228
VCS-1343-833	Dome	8	203	2	51	38	965	102 ¼	2597	9	229	48	1219	2350	1066	330	1249	678725
VCS-1643-1033	Dome	10	254	2	51	42	1067	107 ¼	2724	10	254	54	1372	3250	1474	425	1609	678677
VCS-1943-1528	Dome	10	254	2	51	48	1219	104 ½	2654	10	254	60	1524	3662	1661	458	1734	693058
VCS-1656-1728	Dome	10	254	2	51	48	1219	119	3023	10	254	60	1524	3788	1718	571	2161	693058
VCS-2056-2228	Dome	12	305	2	51	54	1372	124 11/16	3167	12	304	69	1753	4400	1996	890	3369	679052
VCS-2456-2628	Dome	12	305	2	51	60	1524	128 ½	3264	12	305	71	1803	5625	2551	1155	4372	681407
VCS-2856-3028	Dome	14	356	2	51	66	1676	142 7/8	3629	14	356	80	2032	6450	2926	1380	5223	679054

NOTES: Dimensions shown are intended for estimating purposes only. Contact your Facet representative for certified drawings.

FLOW RATES

(Subject to Limitations Contained in Footnotes)

MODEL NUMBER	MAXIMUM FLOW RATES RECOMMENDED FOR VISCOSITIES SHOWN[2]																							
	PERF.[1]		31 SSU		33.0 SSU		36.0 SSU		39.0 SSU		42.3 SSU		45.5 SSU		52.0 SSU		58.8 SSU		97.5 SSU		150.0 SSU		200.0 SSU	
	Solids	Water	1 CS		2.2 CS		3.0 CS		4.0 CS		5.0 CS		6.0 CS		8.0 CS		10.0 CS		20.0 CS		32.0 CS		43.0 CS	
	Micron	ppm	gpm	lpm	gpm	lpm	gpm	lpm	gpm	lpm	gpm	lpm	gpm	lpm	gpm	lpm	gpm	lpm	gpm	lpm	gpm	lpm	gpm	lpm
VCS-222-122	25	40	145	549	120	454	90	341	65	246	50	189	45	170	30	114	25	95	10	38	OA	OA	OA	OA
	5	10																			OA	OA	OA	OA
	2	<10																			8	30	6	23
	0.5	<5																			6	23	4	15
VCS-243-222	25	40	270	1022	225	852	165	625	125	473	100	379	80	303	60	227	50	189	25	95	OA	OA	OA	OA
	5	10																			OA	OA	OA	OA
	2	<10																			14	53	10	38
	0.5	<5																			11	42	7	27
VCS-328-222	25	40	270	1022	225	852	165	625	125	473	100	379	80	303	60	227	50	189	25	95	OA	OA	OA	OA
	5	10																			OA	OA	OA	OA
	2	<10																			14	53	10	38
	0.5	<5																			11	42	7	27
VCS-343-228	25	40	400	1514	335	1268	245	927	185	700	145	549	120	454	90	341	75	284	35	132	OA	OA	OA	OA
	5	10																			OA	OA	OA	OA
	2	<10																			20	76	15	57
	0.5	<5																			15	57	10	38
VCS-443-328	25	40	535	2025	445	1684	325	1230	245	927	195	738	160	606	120	454	100	379	50	189	OA	OA	OA	OA
	5	10																			OA	OA	OA	OA
	2	<10																			27	102	20	76
	0.5	<5																			20	76	14	53
VCS-456-428	25	40	720	2725	600	2271	440	1665	330	1249	265	1003	215	814	160	606	130	492	65	246	OA	OA	OA	OA
	5	10																			OA	OA	OA	OA
	2	<10																			37	140	27	102
	0.5	<5																			28	106	18	68
VCS-643-428	25	40	805	3047	670	2536	490	1855	370	1400	295	1117	240	908	180	681	145	549	70	265	OA	OA	OA	OA
	5	10																			OA	OA	OA	OA
	2	<10																			41	155	31	117
	0.5	<5																			31	117	21	80
VCS-743-433	25	40	935	3539	780	2952	570	2157	430	1628	345	1306	280	1060	210	795	170	643	85	322	OA	OA	OA	OA
	5	10																			OA	OA	OA	OA
	2	<10																			48	182	36	136
	0.5	<5																			36	136	27	102
VCS-656-533	25	40	1075	4069	895	3388	655	2479	490	1855	395	1495	320	1211	240	908	195	738	95	360	OA	OA	OA	OA
	5	10																			OA	OA	OA	OA
	2	<10																			55	208	41	155
	0.5	<5																			42	159	28	106
VCS-843-533	25	40	1075	4069	895	3388	655	2479	490	1855	395	1495	320	1211	240	908	195	738	95	360	OA	OA	OA	OA
	5	10																			OA	OA	OA	OA
	2	<10																			55	208	41	155
	0.5	<5																			42	159	28	106
VCS-1043-633	25	40	1340	5072	1115	4220	815	3085	615	2328	490	1855	400	1514	300	1136	245	927	120	454	OA	OA	OA	OA
	5	10																			OA	OA	OA	OA
	2	<10																			69	261	51	193
	0.5	<5																			52	197	35	133
VCS-856-733	25	40	1435	5431	1195	4523	870	3293	655	2479	525	1987	430	1628	325	1230	265	1003	130	492	OA	OA	OA	OA
	5	10																			OA	OA	OA	OA
	2	<10																			74	280	55	208
	0.5	<5																			56	212	21	80
VCS-1243-733	25	40	1610	6094	1340	5072	980	3709	735	2782	590	2233	480	1817	360	1363	295	1117	145	549	OA	OA	OA	OA
	5	10																			OA	OA	OA	OA
	2	<10																			83	314	62	235
	0.5	<5																			62	235	42	159
VCS-1343-833	25	40	1740	6586	1450	5488	1060	4012	800	3028	640	2422	520	1968	390	1476	320	1211	160	606	OA	OA	OA	OA
	5	10																			OA	OA	OA	OA
	2	<10																			90	341	67	254
	0.5	<5																			68	257	45	170
VCS-1643-1033	25	40	2140	8100	1785	6756	1605	6075	980	3709	785	2971	645	2441	480	1817	395	1495	195	738	OA	OA	OA	OA
	5	10																			OA	OA	OA	OA
	2	<10																			110	416	83	314
	0.5	<5																			35	133	56	212

NOTE: The above flow rates are sizing guides only. Calculations of specific service conditions may result in units with flow rates other than those shown above.
OA = On Application
(1) Nominal Micron rating is based on removing 96 to 98% of all solids larger than the rating shown in one pass through a clean cartridge.
(2) Flow rates are based on normal conditions when the interfacial tension between the water and the continuous phase is not less than 36 dynes per centimeter, operating temperature does not exceed 240°F, and pH value between 5 and 9.

Single-Stage Coalescer Housings

HP Series

Facet HP Series single-stage coalescers use wafer repacks to remove gross amounts of water and solids from hydrocarbons. They are available in several standard sizes to accommodate flows from 10 to 2000 gpm (38 to 7570 lpm). They provide protection to filtration systems from gross amounts of water and solids that are commonly carried through inbound transport pipelines.

HP Series housings offer an option of using coalescer cartridges for more efficient solids separation and liquid-liquid water separation. Use of an adaptor kit permits returning to the use of repacks at any time.

HP Series housings have no internal moving parts and are designed for easy servicing, thereby reducing maintenance costs. Each housing is manufactured with quality workmanship and materials to give long- lasting and dependable service.

Variations from standard design are available in higher pressures, other materials, special connections or other quick opening closures.

Standard Design Features

- Body: Carbon steel construction
- ASME Code, Section VIII, Div. 1, stamped and certified
- Designed for 150 psi @ 250 °F (10.34 bar @ 121 °C)
- Housing Closure:
  Blind cover on housings less than 14” (356 mm) OD
  Swing bolt closure on housings 14” (356 mm) OD and larger
- Housing Covers:
  Removable on housing up to 14” (356 mm) OD
  Hinged on housings 14” (356 mm)
  thru 36” (914 mm) OD
  Rotating davits on housings 42” (1067 mm) OD and larger
- Head Gasket: Buna-N — other material available by request
- Exterior: Prime coated
- Saddle supports for pier mounting

Options

- Steel stands available
- Internal epoxy coating

Standard Connections

- Inlet and outlet: 150# RF (ANSI) flanged
- All other connections are 3000# NPT female type couplings

Single-Stage Coalescer Housings

HP Series

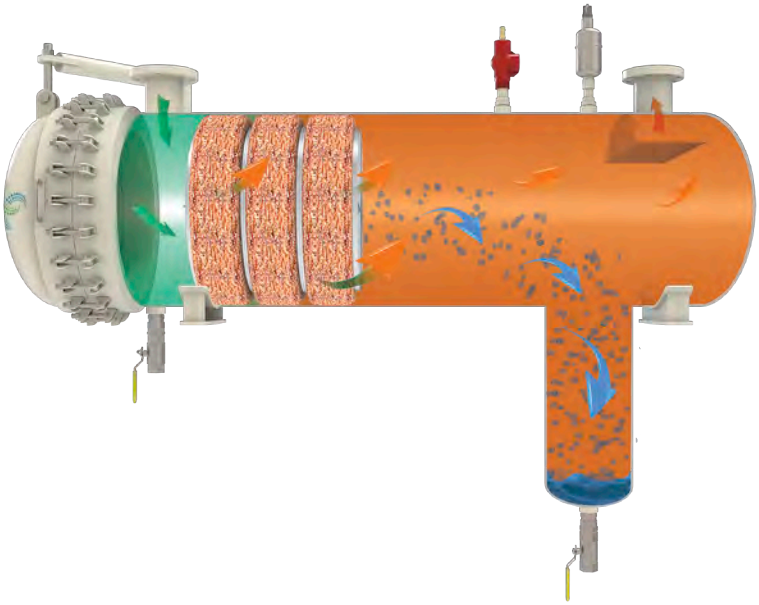

GUIDELINE FOR FLOW CAPACITIES OF EQUIPMENT

(Subject to Limitations Contained in Footnotes)

MODEL	For Excelsior Type Cartridges Only See (3) (4) & Media Chart HP Series Flow Rate in gpm For Specific Gravity Ranges as Shown at 60 °F				
	0.55 - 0.65	0.66 - 0.72	0.73 - 0.77	0.78 - 0.82	0.83 - 0.86
HP-10	10	10	8	6	5
HP-25	25	23	18	15	11
HP-50	43	40	31	26	20
HP-80	70	65	50	43	32
HP-100	100	90	75	60	45
HP-120	125	110	90	75	55
HP-150	160	150	120	100	75
HP-180	205	190	150	125	95
HP-200	255	230	185	155	115
HP-300	370	330	270	225	165
HP-500	585	530	425	350	265
HP-750	840	750	600	510	375
HP-1000	1200	1080	860	720	540
HP-1500	1550	1400	1130	940	700
HP-1800	1960	1800	1430	1200	900
HP-2000	2400	2200	1750	1425	1100
Estimated Effic.(1) (3)	99.95%	98-99%	98-99%	97-98%	97-98%

MODEL	For Glass Fiber, Carbon Steel, Stainless Steel or Combination Packs(4) & Media Chart HPX Series Flow Rate in gpm For Specific Gravity Ranges as Shown at 60 °F				
	0.55 - 0.65	0.66 - 0.72	0.73 - 0.77	0.78 - 0.82	0.83 - 0.86
HPX-10	6	6	5	4	3
HPX-25	16	15	12	10	7
HPX-50	29	27	21	17	13
HPX-80	47	43	33	28	21
HPX-100	65	60	50	40	30
HPX-120	84	73	60	50	35
HPX-150	105	100	80	65	50
HPX-180	135	125	100	85	63
HPX-200	170	150	120	100	75
HPX-300	245	220	180	150	110
HPX-500	390	350	280	230	175
HPX-750	560	500	400	340	250
HPX-1000	800	720	570	480	360
HPX-1500	1030	930	750	625	465
HPX-1800	1300	1200	960	800	600
HPX-2000	1600	1460	1160	950	730
Estimated Effic.(2) (3)	See Media Chart				

(1) Estimated efficiency is based on conditions where the inlet water content is between 0.5% and 3% by volume, pH value between 5 and 9, operating temperature does not exceed 250 °F, and interfacial tension between liquid and water phase is not less than 35 dynes per centimeter (See Media Chart).

(2) Estimated efficiency is based on conditions where the inlet water content is between 0.5% and 3% by volume, and interfacial tension between the liquid and water phase is not less than 35 dynes per centimeter. (See Media Chart).

(3) Efficiencies shown are estimated based on general conditions normally encountered in such applications. These efficiencies are not warranted until all data have been submitted on Facet Application Information Sheet for evaluation and statement of efficiency.

(4) Applications for liquid temperatures less than 60 °F should be referred either to your distributor or to the factory.

EQUIPMENT SELECTION GUIDELINES

Based on Normal Operating Conditions and Subject to Limitations Shown in Flow Guideline

Performance Guidelines		Moderately Efficient Removal of Gross Solids and Water from Heavy and Light Liquids
When use	To remove	
Butane / Propane	Solids	RG4
	Entrained Water	RG6-7
	Water Haze	R6
Aviation Gasoline	Solids	RG4
	Entrained Water	RG7
	Water Haze	R7
Motor Gasolines	Solids	RG4
	Entrained Water	RG7
	Water Haze	R7
Naphtha (Light)	Solids	RG4
	Entrained Water	RG7
	Water Haze	Q(1)
Kerosene and Jet Fuel	Solids	RG4
	Entrained Water	RG7
	Water Haze	Q(1)
Diesel Fuel	Solids	RG4
	Entrained Water	RG8
	Water Haze	N(1)
Fuel Oil	Solids	RG4
	Entrained Water	RG8
	Water Haze	N(1)
Hydraulic Oil	Solids	RG4
	Entrained Water	RM9
	Water Haze	N(1)
Lube Oils	Solids	RG4
	Entrained Water	RM9
	Water Haze	N(1)

Recommendations(1)
R = Recommended
Q = With Qualification
N = Not Recommended

Contaminant Load(1)	
Solids	Water
L = 0-0.5 ppm	L = 0-0.5% Vol
M = 0.6-1.0 ppm	M = 0.6-3.0% Vol
G = Greater than 1.0 ppm	G = Greater than 3.0% Vol

Solids Removal	Water Removal
1 = Nominal 2 to 5µ	6 = Excellent = 100%
2 = Nominal 5 to 10µ	7 = Good = 99.5%
3 = Nominal 15 to 25µ	8 = Moderate = 98%
4 = Nominal 40µ	9 = Fair = 95%

(1) Contact Factory for Other Recommendations

MEDIA CHART

MEDIA	NOMINAL SOLIDS RETENTION	MAX. TEMP.	pH*	EFFICIENCY
Excelsior	40 - 60	250°F	5-9	(1)
Glass Fiber	30 - 40	350°F	less than 10	99.9%
Stainless Steel	50 - 60	600°F	more than 4	98%
Carbon Steel	50 - 60	600°F	more than 4	98%
Combination	30 - 40	350°F	less than 10	98%

* Optimum operating condition and should not in itself be restrictive.

(1) Estimated efficiency is based on conditions where the inlet water content is between 0.5% and 3% by volume, pH value between 5 and 9, operating temperature does not exceed 250°F, and interfacial tension between liquid and water phase is not less than 35 dynes per centimeter

Single-Stage Coalescer Housings

HP Series

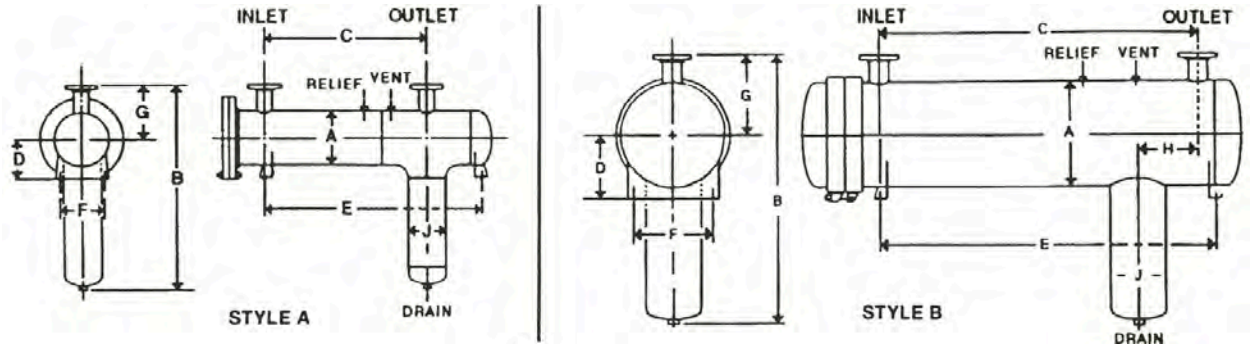

DIMENSIONS

MODEL NUMBER	DIMENSIONS																	
	A		B		C		D		E		F		G		H		J	
STYLE A	in	mm	in	mm	in	mm	in	mm	in	mm	in	mm	in	mm	in	mm	in	mm
HP-10	4 ½	114	33 ½	851	24	610	5	127	30 ½	775	22	559	8	203	—	—	4 ½	114
HP-25	6 ⅝	168	37 ½	953	33	838	6	152	41	1041	24	610	9	229	—	—	6 ⅝	168
HP-50	8 ⅝	219	45	1143	39	991	7	178	48 ½	1232	30	762	10	254	—	—	8 ⅝	219
HP-80	10 ¾	273	46	1168	42	1067	8	203	54	1372	30	762	11	279	—	—	8 ⅝	219
HP-100	12 ¾	324	47	1193	48	1219	9	229	60 ½	1537	30	762	12	305	—	—	8 ⅝	219
HP-120	14	356	48 ½	1232	50	1270	10 ½	268	47 ½	1206	31	787	13	330	—	—	8 ⅝	219
STYLE B																		
HP-150	16	406	51	1295	60	1524	11	279	66	1676	32	813	14	356	4	102	8 ⅝	219
HP-180	18	457	54	1372	66	1676	12	305	72	1829	33	838	15	381	9	229	10 ¾	273
HP-200	20	508	56	1422	72	1829	13	330	78	1981	34	864	16	406	9	229	12 ¾	324
HP-300	24	610	60	1524	75	1905	15	381	81	2057	36	914	18	457	9	229	12 ¾	324
HP-500	30	762	69	1753	80	2032	18	457	86	2184	42	1067	21	533	12	305	14	356
HP-750	36	914	82	2083	92	2337	21	559	98	2489	51	1295	24	610	12	305	16	406
HP-1000	42	1067	91	2311	106	2692	24	610	114	2896	57	1448	27	686	12	305	16	406
HP-1500	48	1219	95	2413	120	3048	27	686	128	3251	57	1448	30	762	12	305	20	508
HP-1800	54	1372	110	2794	132	3353	30	762	142	3607	69	1753	33	838	10	254	20	508
HP-2000	60	1524	119	3023	144	3658	30	762	154	3912	75	1905	36	914	10	254	20	508

STANDARD HOUSING DATA

MODEL NUMBER	LIQUID VOLUME (APPROXIMATE)		SHIPPING WEIGHT (APPROXIMATE)		CONNECTIONS									
					INLET/OUTLET FLANGED		VENT & RELIEF		DRAIN		LEVEL GAUGE		LEVEL CONTROL	
STYLE A	gal	ltr	lbs	kgs	in	mm	in	mm	in	mm	in	mm	in	mm
HP-10	2.4	9	240	109	1	25	½	13	½	13	¾	19	¾	19
HP-25	10.0	38	310	141	1 ½	38	½	13	½	13	¾	19	¾	19
HP-50	18.2	69	780	354	1 ½	38	½	13	¾	19	¾	19	¾	19
HP-80	30.0	113	800	363	2	51	½	13	¾	19	¾	19	¾	19
HP-100	46.6	176	1550	703	3	76	¾	19	¾	19	¾	19	1	25
HP-120	64.7	245	1700	772	3	76	¾	19	¾	19	¾	19	1 ½	38
STYLE B														
HP-150	77.7	294	1815	824	3	76	¾	19	¾	19	¾	19	1 ½	38
HP-180	120.0	454	2000	907	3	76	¾	19	1	25	¾	19	1 ½	38
HP-200	152.0	575	2100	954	3	76	1	25	1	25	¾	19	1 ½	38
HP-300	201.6	763	2300	1045	4	102	1	25	1 ½	38	¾	19	1 ½	38
HP-500	313.4	1186	3100	1407	6	152	1	25	1 ½	38	¾	19	1 ½	38
HP-750	610.5	2310	4000	1816	6	152	1 ½	38	2	51	¾	19	1 ½	38
HP-1000	742.6	2810	4600	2088	8	203	1 ½	38	2	51	¾	19	2	51
HP-1500	969.0	3668	5200	2361	8	203	1 ½	38	2	51	¾	19	2	51
HP-1800	1428.0	5405	6200	2815	10	254	1 ½	38	2	51	¾	19	2	51
HP-2000	2116.8	8012	8000	3632	10	254	1 ½	38	2	51	¾	19	2	51

NOTE: All dimensions, weights, and volumes are approximate and should be used for estimating only.

Conversion Kits

CKS Series

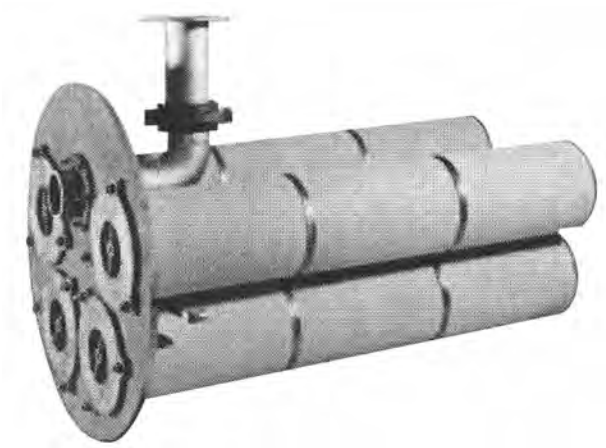

Standard Design Features

- Kits contain all necessary parts for conversion including hardware, cartridges and gaskets.

Materials

- Cartridge holding plates are aluminum and other parts are stainless steel. Kits contain all necessary parts for conversion including hardware, cartridges and gaskets.

Facet CKS Series conversion kits are designed to upgrade HP Series separators which presently use excelsior repacks in order to provide more efficient solids filtration and water separation.

They are designed for retrofit in vessels without need for alteration to basic vessel design in order to permit use of current design first stage coalescer cartridges which flow inside-out. Use of various Facet cartridges will permit various efficiencies desired by the user. Conversions enable use of out-of-service equipment which would otherwise be in storage or disposed of by sale or scrap. Kits installed without vessel modifications permit return to use of excelsior cartridges when desired.

CKS Series conversion kits permit the use of any of the Facet CA, CR, CB, CC, CMP, AG or U5 Series cartridges, all 6” (152 mm) OD, rigid, high flow cartridges. All cartridges are capable of withstanding differential pressure of 75 psi (5.17 bar) without structural failure.

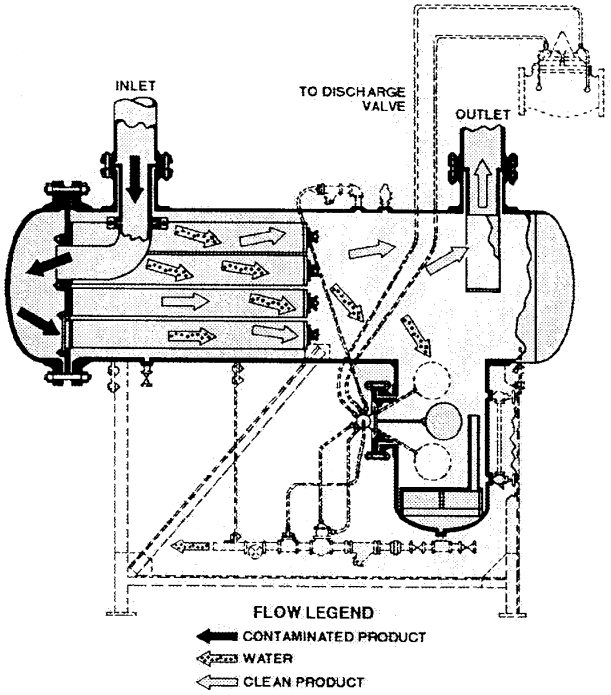

SELECTION OF KITS

MODEL NUMBER	NUMBER OF CARTRIDGES	DESIGNED TO CONVERT
M-398	1	HP-80
M-479	4	HP-200
M-397	5	HP-300
M-620	9	HP-500
M-396	10	HP-600
M-478	13	HP-750
M-503	17	HP-1000

NOTE: For information on additional kits available, consult your Facet representative.

Liquid/Liquid Separation Application Information

1. APPLICATION:_____

_____

2. OPERATING CONDITIONS AT POINT OF INSTALLATION:

A. PRODUCT:_____ **B.** SPECIFIC GRAVITY:_____@_____°F

C. FLOW RATE:_____GPM **D.** TEMPERATURE:_____°F.

E. PRESSURE:_____PSIG

F. VISCOSITY:_____SSU CS CP @____°F and____SSU CS CP @____°F

G. INTERFACIAL TENSION:____DYNES PER CENTIMETER:____

H. CONTAMINANTS: LIQUID:____% VOLUME SOLIDS:____(% WT.) (% VOL.)

I. DESCRIPTION OF LIQUID:_____

J. pH OF LIQUID:____TYPE AND CONCENTRATION:_____

K. DESCRIPTION OF SOLIDS:_____

L. PREVAILING PARTICLE SIZE RANGE:____

M. TYPE AND CONCENTRATION OF CORROSION INHIBITORS, IF ANY:_____

3. REQUIRED PERFORMANCE EFFICIENCY:

A. ALLOWABLE ENTRAINMENT IN EFFLUENT:_____

B. DESIRED PARTICLE RETENTION (MICRON):____

C. MAXIMUM ALLOWABLE INITIAL PRESSURE DROP:____PSID

4. MECHANICAL DESIGN CONDITIONS:

A. DESIGN PRESSURE:____PSIG

B. DESIGN TEMPERATURE:____°F.

C. CORROSION ALLOWANCE:____

D. CODE OR SPECIFICATION:____ASME?____ASME STAMP?____OTHER?

E. FLOW RATE:____GPM

F. MATERIALS OF CONSTRUCTION:_____

G. INLET AND OUTLET CONNECTIONS:

SIZE:____FLANGED ❑ FEMALE NPT ❑ GROOVED ❑ OTHER ❑

H. OTHER CONNECTIONS ON VESSEL:

CONNECTION FOR	SIZE	FLANGED	THREADED
PRESSURE GAUGE	____	❑	❑
RELIEF	____	❑	❑
VENT	____	❑	❑
DRAIN	____	❑	❑
LEVEL GAUGE	____	❑	❑
LEVEL CONTROL	____	❑	❑

I. SPECIAL DESIGN FEATURES:_____

5. ACCESSORY ITEMS:

A. DIFFERENTIAL PRESSURE GAUGE?____ DIRECT READING?____

WITH DEAD HAND?____ NON-DIRECT READING?____

B. MANUAL VENT VALVE?____ **C.** PRESSURE RELIEF VALVE?____

D. LEVEL GAUGE?____TUBULAR?____REFLEX?____TRANSPARENT?____

5. ACCESSORY ITEMS (Continued):

E. MANUAL DRAIN VALVE?____ **F.** LEVEL CONTROL (DUAL GRAVITY)?____

G. SLUG & DRAIN VALVE ASSEMBLY?____RATE OF FLOW CONTROL? ____FLOAT TESTER?
MATERIALS FOR SLUG VALVE:____ CAST STEEL ____ DUCTILE IRON ____ OTHER

H. IMMERSION HEATER____ SUMP____ DRAIN____ VOLTAGE____INSULATION?____

I. STEEL SUPPORT STAND (FOR HORIZONTAL VESSELS ONLY)?____

J. INTERNAL EPOXY COATING?____ **K.** AIR ELIMINATOR?____

L. HEAD OPENING DEVICE?____

6. BECAUSE OF COMPATIBILITY OR OTHER REASONS, DO YOU HAVE ANY PREFERENCE FOR THE FOLLOWING:

HOUSING:	GASKET:	CARTRIDGE:
❑ CARBON STEEL	❑ BUNA-N	❑ PAPER
❑ ALUMINUM	❑ VITON A	❑ SCREEN
❑ STAINLESS	❑ TEFLON®	❑ GLASS FIBER
❑ OTHER_____	❑ OTHER_____	❑ OTHER_____
_____	_____	_____
_____		_____

7. REMARKS:_____

_____

_____

8. INSTRUCTIONS: SUBMIT QUOTATION TO: CUSTOMER ❑ DISTRIBUTOR ❑
ORIGINAL &_____COPIES REQUIRED

CUSTOMER_____ DISTRIBUTOR_____

9. QUOTATION INFORMATION:

NEED QUOTATION—HAVE ORDER FOR PROJECT? YES ❑ NO ❑
WILL ORDER IN: 0-6 MONTHS ❑ LATER ❑
NUMBER OF COMPETITORS QUOTING?____

In cases where any data is unknown or not available, indicate accordingly.
Facet will contact you if further details are needed.

SUBMITTED BY:_____ FOR:_____

Go-No-Go®
Absorptive Cartridges
GNG Series

Double-Duty for Twice the Protection

Facet's Go-No-Go (GNG) absorptive cartridges perform two jobs with one cartridge. It absorbs water and removes solids reliably and efficiently. As the product stream flows from the outside of the cartridge to the inside, the GNG special water absorbent medium retains water, and the pleats expand. As the maximum water holding capacity is reached, there is a reduction in flow. The cartridge slows, then stops the flow of product as it reaches maximum capacity. This indicates that the cartridge is ready to be changed, assuring you of clean, dry product.

Benefits

- Absorbs highly emulsified water to less than 5 ppm
- Provides positive shut-off —increased differential pressure signals cartridge change-out
- Holds larger amounts of water than competition
- Ultra fine particulate removal efficiencies
- High collapse rating of cartridges
- Quick, easy cartridge change-out
- Easy housing installation

Standard Design Features

- Recommended max. operating temperature: 180 °F (82 °C)
- Maximum differential pressure: 100 psi (6.9 bar)
- Flow direction: Outside to in
- Layered multi-media pleated sections

Materials

- All metal components treated to protect against corrosion
- Special water absorbing medium
- Metal support shells
- Standard gasket material is Buna-N—other materials available upon request

Applications

- Fuel dispensing pumps
- Off-road machinery
- Service stations
- Marinas
- Truck stops
- Bus fueling
- Diesel fuel
- Gasoline
- Kerosene
- Other engine fuels
- Various oils

FLOW RATES (5 MICRON)

MODEL		GNG-210-5PL		GNG-512-5PL		GNG-609-5PL		GNG-612-5PL		GNG-614-5PL		GNG-718-5PL	
VISCOSITY		Flow	ΔP	Flow	ΔP	Flow	ΔP	Flow	ΔP	Flow	ΔP	Flow	ΔP
ssu	cs	gpm	psi	gpm	psi	gpm	psi	gpm	psi	gpm	psi	gpm	psi
29	1	20.0	2	50.0	3	45.0	4	60.0	4	58.0	2	75.0	2
32	2	20.0	3	48.0	4	36.0	4	50.0	4	58.0	4	74.0	4
39	4	18.0	4	36.0	4	27.0	4	37.0	4	43.0	4	55.0	4
46	6	12.0	4	24.0	4	18.0	4	25.0	4	29.0	4	37.0	4
58	10	7.0	4	14.0	4	11.0	4	15.0	4	18.0	4	23.0	4
98	20	3.6	4	7.0	4	5.5	4	7.5	4	9.0	4	12.0	4
140	30	2.4	4	5.0	4	3.6	4	5.0	4	6.0	4	8.0	4
190	40	1.8	4	3.6	4	2.7	4	3.75	4	4.0	4	5.0	4
230	50	1.4	4	2.8	4	2.1	4	3.0	4	3.0	4	4.0	4
342	75	1.0	4	1.9	4	1.4	4	2.0	4	2.0	4	2.5	4
455	100	0.7	4	1.4	4	1.0	4	1.5	4	2.0	4	2.25	4
910	200	0.3	4	0.7	4	0.5	4	.75	4	1.0	4	1.25	4
1365	300	0.2	4	0.4	4	0.3	4	.5	4	.5	4	.6	4
1818	400	0.1	4	0.3	4	0.25	4	.4	4	.4	4	.5	4

Go-No-Go®
Absorptive Cartridges
GNG Series

PERFORMANCE SPECIFICATION

SERIES	NOMINAL REMOVAL MICRON	
	5	25
GNG	•	•

MATERIALS

Filter media options:

5, 25 µm: Water Absorptive Media

Gasket Materials:

Standard: Buna-N

Optional: Other materials available upon request

Components:

Center Core: Offered in Tin Plated, Powder Coated

End Caps: Carbon Steel

Adhesives: Urethane, Two Part Epoxy, Plastisol

FILTER SIZES AND DIMENSIONS

SERIES	DIMENSIONS					
	OD		ID		LENGTH	
	in	mm	in	mm	in	mm
GNG-210-5PL	2 5/8	67	1 1/32	26	9 3/4	248
GNG-210-25PL	2 5/8	67	1 1/32	26	9 3/4	248
GNG-412-5PL	4 1/2	114	1 3/4	44	12 1/8	308
GNG-512-5PL	5 5/8	143	1 7/8	48	12 1/4	311
GNG-512-25PL	5 5/8	143	1 7/8	48	12 1/4	311
GNG-609-5PL	6	152	1 1/2	38	9 13/16	249
GNG-609-25PL	6	152	1 1/2	38	9 13/16	249
GNG-612-5PL	6	152	3 1/2	89	12 11/16	322
GNG-612-25PL	6	152	3 1/2	89	12 11/16	322
GNG-614-5PL	6	152	3 1/2	89	14 1/2	368
GNG-718-5PL	6	152	2 5/8	67	18	457
GNG-718-5PLZ	6	152	3 3/16	81	18	457
GNG-736-5PL	6	152	2 5/8	67	36	914

Note: The dimensions are nominal. These are standard sizes. Normal delivery is 2-3 weeks ARO. Many other size and combinations are available. Please call us for special sizes.

TEMPERATURE / COMPATIBILITY GUIDE

SERIES	MAXIMUM TEMPERATURE	pH RANGE	PETROLEUM PRODUCTS	CHEMICALS
GNG	180 °F	5 - 9	Excellent	Good

CARTRIDGE ORDERING INFORMATION

SERIES	DIMENSIONS	MICRON RATING	MEDIA	SPECIAL FEATURES
GNG	614	5	PL	Z
	See Filter Sizes and Dimensions Table	5, 25	PL= Pleated Paper	Z = Special ID J = Non-Asbestos Gasket N = Neoprene Gasket V = Viton Gasket

Absorptive Cartridges

FIWA Series

Double-Duty for Twice the Protection

Facet's FIWA absorptive cartridges perform two jobs with one cartridge. It absorbs water and removes solids reliably and efficiently from a wide range of petroleum products. As the product stream flows from the outside of the cartridge to the inside, the FIWA special water absorbent medium retains water, and the pleats expand.

As the maximum water holding capacity is reached, there is a reduction in flow. The cartridge slows, then stops the flow of product as it reaches maximum capacity. This indicates that the cartridge is ready to be changed, assuring you of clean, dry product.

Benefits

- Absorbs highly emulsified water to less than 5 ppm
- Provides positive shut-off —increased differential pressure signals cartridge change-out
- Holds larger amounts of water than competition
- Ultra fine particulate removal efficiencies
- High collapse rating of cartridges
- Quick, easy cartridge change-out
- Easy housing installation

Applications

- Fuel dispensing pumps
- Off-road machinery
- Service stations
- Marinas
- Truck stops
- Bus fueling
- Diesel fuel
- Gasoline
- Kerosene
- Other engine fuels
- Various oils

Standard Design Features

- Recommended max. operating temperature: 225 °F (107 °C)
- Maximum differential pressure: 100 psi (6.9 bar)
- Flow direction: Outside to in
- Layered multi-media pleated sections

Materials

- All metal components treated to protect against corrosion
- Special water absorbing medium
- Metal support shells
- Standard gasket material is Buna-N —other materials available upon request

Absorptive Cartridges

FIWA Series

PERFORMANCE SPECIFICATION

SERIES	NOMINAL REMOVAL MICRON					
	0.5	1	3	5	10	25
FIWA	•	•	•	•	•	•

MATERIALS

Filter media options:

0.5, 25 µm: Resin Impregnated Cellulose with Water Absorptive Media

Gasket Materials:

Standard: Buna-N

Optional: Other materials available upon request

Components:

Center Core: Electro-Tin Plated

End Caps: Electro-Tin Plated

Outer Body: Electro-Tin Plated

Adhesives: Thermoset PVC, Urethane, Epoxy

FILTER SIZES AND DIMENSIONS

SERIES	DIMENSIONS					
	OD		ID		LENGTH	
	in	mm	in	mm	in	mm
FIWA-210-µ	2 5/8	67	1 1/16	27	9 7/8	251
FIWA-229-µ	2 5/8	67	1 1/16	27	29 1/4	743
FIWA-230-µ	2 5/8	67	1 1/16	27	29 5/8	752
FIWA-336-µ	3	76	1 1/2	38	35 3/4	908
FIWA-512-µ	5 5/8	143	1 7/8	48	12 1/8	308
FIWA-609-µ	6	152	1 1/2	38	9 3/4	248
FIWA-629-µ	6	152	3 1/2	89	29	737
FIWA-718-µ	6	152	2 5/8	67	18	457
FIWA-736-µ	6	152	2 5/8	67	36	914

Note: The dimensions are nominal. There are many other sizes and combinations, not listed here, that are available. Please call us for assistance with special configuration.

µ = Micron rating

TEMPERATURE / COMPATIBILITY GUIDE

MEDIA	MAXIMUM TEMPERATURE	pH RANGE	PETROLEUM PRODUCTS	CHEMICALS	AQUEOUS SOLUTIONS
Water absorptive Media	225 °F	5 - 9	Excellent	Good	N/A

CARTRIDGE ORDERING INFORMATION

SERIES	DIMENSIONS	MICRON RATING	SPECIAL FEATURES
FIWA	718	5	Z
	See Filter Sizes and Dimensions Table	0.5, 1, 3, 5, 10, 25	Z = Special ID J = Non-Asbestos Gasket N = Neoprene Gasket V = Viton Gasket

Clay Treater Cartridges

The primary purposes of clay treatment are:

- To remove acids or products of oxidation from lube and hydraulic oils
- To remove additives and surfactants from fuel

Facet's specially selected Attapulgus clay greatly resists water saturation and provides maximum surfactant adsorptivity and filtration area found in clay treater cartridges.

Standard Design Features

- Maximum adsorptive and filtration area
- Greatly resists water saturation
- Vibra-packed clay minimizes settling
- Interchangeable with other manufacturer's bag and canister clay treater cartridges
- Hoisting handles expedite cartridge installation and changeout

Materials

Bag Cartridge

- Polypropylene center tube
- Felt center tube migration barrier
- Tightly woven canvas bag
- Vibra-packed with Attapulgus clay to capacity
- Heavy-duty canvas hoisting handles

Canister Cartridge

- Polypropylene center tube
- Felt center tube migration barrier
- Non-woven polyester inner wraps
- Vibra-packed with Attapulgus clay to capacity
- Heavy-duty metal hoisting handle
- Engineered plastic end caps
- Polyester outer wrap
- Buna-N gaskets on both ends for assured sealing

Applications

Facet's clay treater cartridges may be used to remove soluble contaminants such as acids, waxes, gums, resins, asphaltanes, sludges, carbon residues and colloidal particles from lubricating, hydraulic, seal, quench, and insulating oils (in circuit breaker, transformers). They may also be used for surfactant removal from jet fuel, gasoline, kerosene and diesel. They are often used to remove color from fuel to help bring back its normal appearance.

MODEL NUMBER	TYPE	DIRECTION OF FLOW	MEDIA	DIMENSIONS						MAXIMUM OPERATING TEMPERATURE	
				NOMINAL LENGTH		OD		ID			
				in	mm	in	mm	in	mm	°F	°C
C-766-4	Canister	Outside/In	Attapulgus clay, low volatile material Graded 60-90 mesh	18	460	7	177	2 ¼	57	240	115
C-727-6	Bag	Outside/In		18	460	7	177	2 ¼	57	140	60
C-727-2	Bag	Outside/In		19	480	7	177	2 ¼	57	140	60

Clay Treater Cartridges

PERFORMANCE DATA

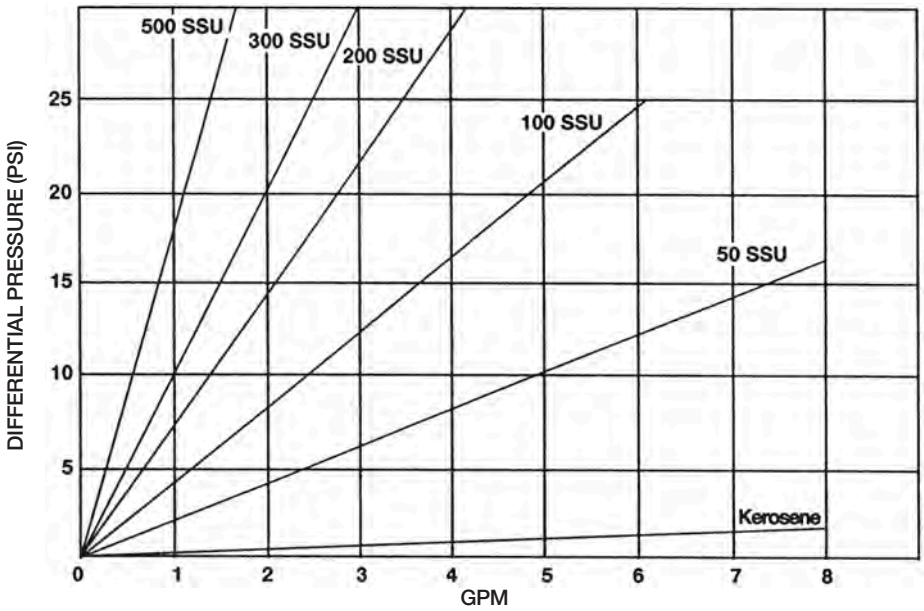

FLOW RATES

LIQUID	RECOMMENDED MINIMUM OPERATING TEMPERATURE		MAXIMUM FLOW RATE PER ELEMENT	
	°F	°C	USGPM	LPM
Insulating Oil	140	60	1 - 2	4 - 8
Hydraulic Oil	150	66	1 - 2	4 - 8
Seal Oil	150	66	1 - 2	4 - 8
Lubricating Oil	160	71	1	4
Quench Oil	150	66	.5 - 1	2 - 4
Gasoline	40	4.4	8 - 9	30 - 34
Kerosene	50	10	6 - 7	23 - 27
Jet A / Jet A1	40	4.4	6 - 7	23 - 27
Diesel	60	15.6	4 - 5	15 - 19

Clay Treater Cartridges

Mounting Arrangements

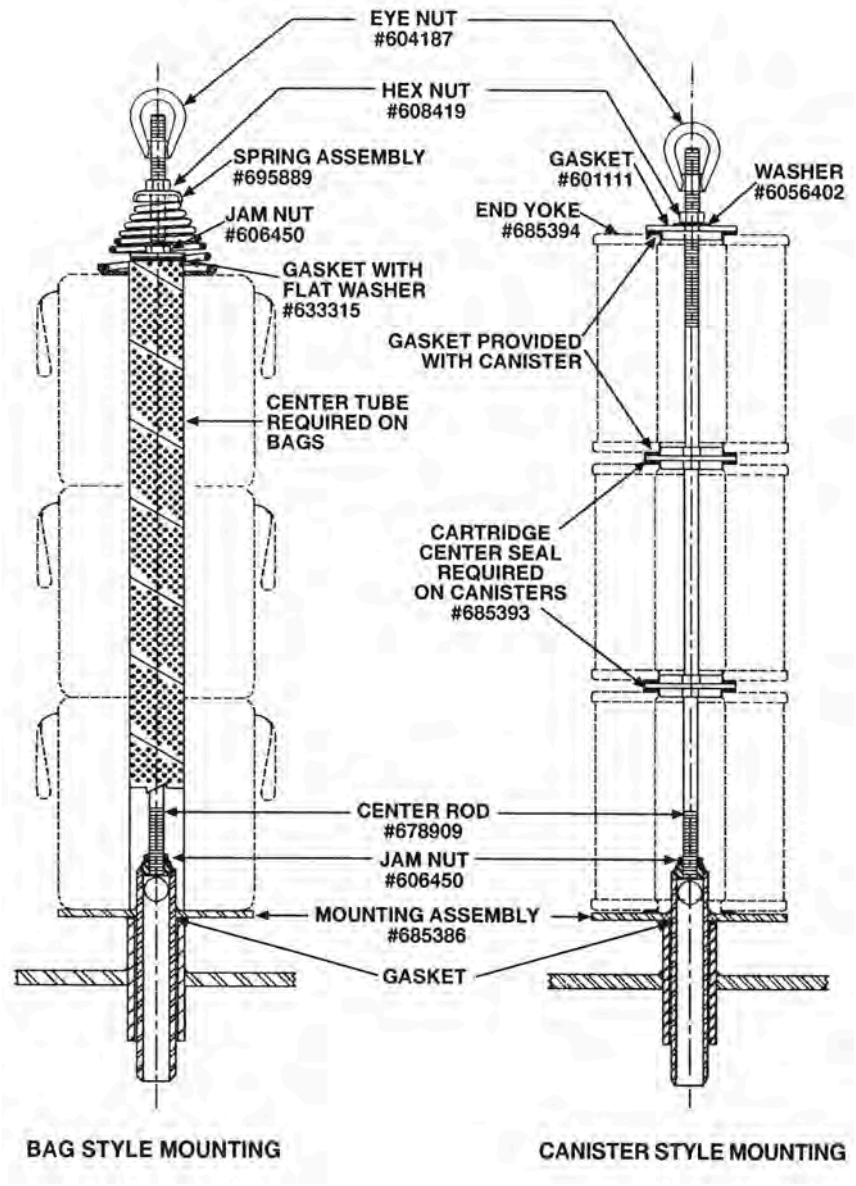

Clay Treater Housings

F Series

Standard Housing Design

- Welded carbon steel construction
- ASME Code, Section VIII construction, stamped and certified
- Design pressure: 150 psi @ 250 °F (10.3 bar @ 121 °C)
- Inlet and outlet permanently marked
- Interior: Epoxy coated
- Exterior: Prime coated
- Removable cartridge mounting post
- Swing bolt closure
- Buna-N closure gasket
- Hydraulic headlift

NPT Connections

- ¼” differential pressure gauge
- ¾” pressure relief valve and vent
- 2” main drain
- 1½” side drain

Options

- Automatic air eliminator
- Differential pressure gauge
- Pressure relief valve
- Sampling probe
- Cartridge hoist assembly
- Removable bundle design

DATA

MODEL NUMBER	LIQUID VOLUME		REQUIRED CARTRIDGES	DRY WEIGHT	
	gal	ltr		lbs	kgs
13F3-C	288	1090	39	1913	868
24F3-C	456	2067	72	3250	1474
31F3-C	702	2657	93	4459	2023
40F3-C	874	3308	120	5380	2440
50F3-C	1167	4417	150	6976	3164
60F3-C	1442	5458	180	8298	3764
67F3-C	1570	5942	201	9602	4355

Weights and volumes are approximate.

Clay Treater Housings

F Series

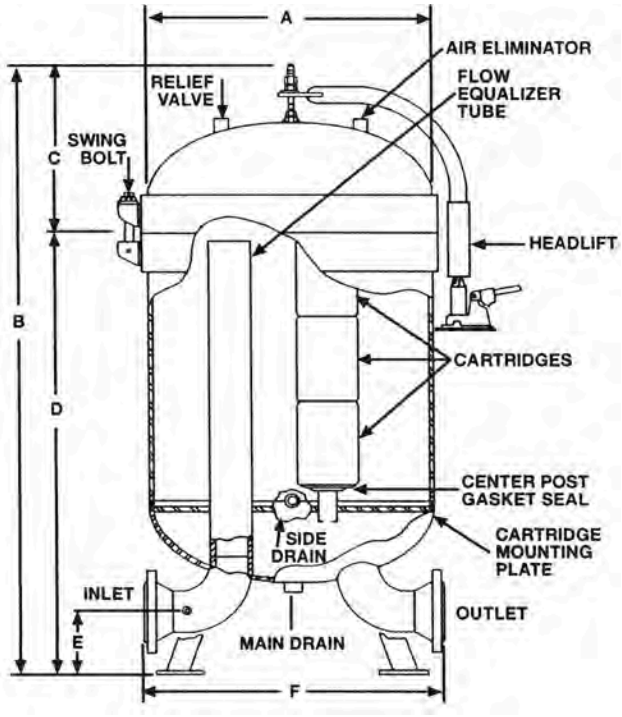

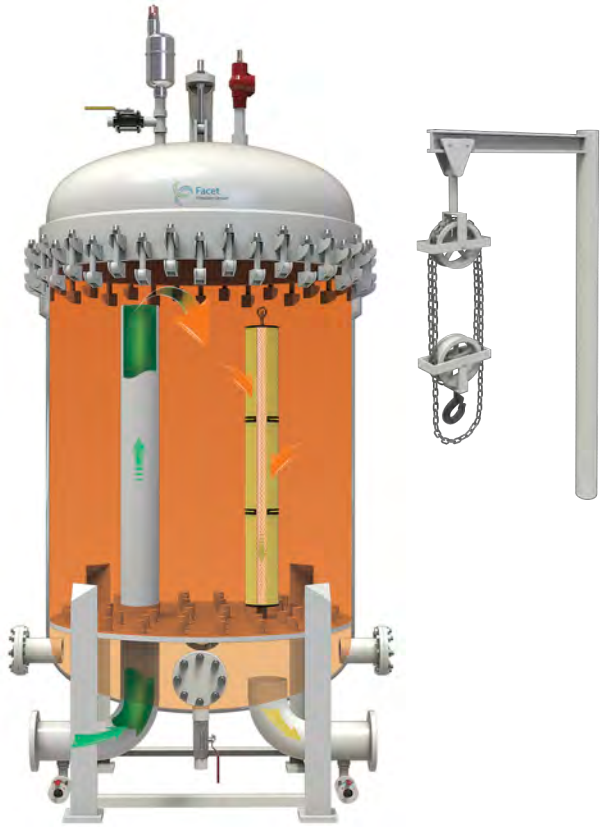

DIMENSIONS

MODEL NUMBER	FLANGED INLET/OUTLET CONNECTIONS		DIMENSIONS												ANCHOR BOLT			
			A		B		C		D		E		F		BOLT CIRCLE		BOLT HOLE	
	in	mm	in	mm	in	mm	in	mm	in	mm	in	mm	in	mm	in	mm	in	mm
13F3-C	4	102	32	813	127 ¼	3232	12 ¾	324	87 ½	2222	6	152	30	762	27 ⅜	695	⅞	22
24F3-C	4	102	42 ¾	1086	134 3/16	3408	16 ¾	425	90 7/16	2297	6	152	30	762	36 ½	927	⅞	22
31F3-C	6	152	48 ¾	1238	141	3581	18 ¾	476	95	2413	7 ½	191	47	1194	40 ¼	1022	1 ⅛	29
40F3-C	6	152	54 ¾	1391	145 5/16	3691	20 13/16	529	97 ¼	2470	7 ½	191	43	1092	50	1270	1 ⅛	29
50F3-C	8	203	60 ¾	1543	152 11/16	3878	23 ¼	591	102 ¾	2610	9	229	55	1397	52	1321	1 ⅛	29
60F3-C	8	203	67	1702	154 ¾	3931	25 ⅜	645	102 ¾	2610	9	229	60	1524	52	1321	1 ⅛	29
67F3-C	8	203	73	1854	158	4013	27 ⅝	702	104	2642	9	229	62	1574	56	1422	1 ⅛	29

All dimensions are approximate and should be used for estimating purposes only.

NOTES:
1. Housing model number will include cartridge model number when selected.
2. Clay treater housings use Facet bag or canister style cartridges, 3 deep per stack.
3. Clay cartridges are not installed at factory prior to shipment.
4. Removable bundle design available on request. Contact your Facet Representative for details.

21 Series & 22 Series Housings

The Facet VF-21SB/22SB series housings, are economical, compact housings for superior in-line filtration protection when used with standard 21 Series or 22 Series cartridges.

Depending on the 21 Series or 22 Series cartridge installed, these housings may be used as filters, absorptive filters, filter separators or air/gas entrainment separators to remove solids, water mist or hydrocarbon carryover.

Both interior and exterior surfaces of the carbon steel body are epoxy coated to protect against corrosion. This sturdy, single cartridge housing is easy to maintain and requires only 2" (51 mm) base clearance for cartridge change out.

Standard Housing Design

- Carbon steel body
- Aluminum head
- Epoxy coated internally and externally
- 150 psi (10.3 bar) design pressure
- Swing bolt quick open closure
- Buna-N o-ring closure gasket
- Vent and drain connections w/ brass petcocks provided
- 1½" NPT inlet and outlet connections

VESSEL OPTIONS

MODEL	DESCRIPTION
VF-21SB	Housing only
VF-21SB-PG	Housing w/ Direct Reading Differential Pressure Gauge
VF-21SB-PGS	Housing w/ Direct Reading Differential Pressure Gauge & Sight Glass
VF-21SB-PGWP	Housing w/ Direct Reading Differential Pressure Gauge & ¾" NPT Coupling for Water Probe
VF-21SB-S	Housing w/ Sight Glass
VF-21SB-WP	Housing w/ ¾" NPT Coupling for Water Probe
VF-22SB	Housing only
VF-22SB-PG	Housing w/ Direct Reading Differential Pressure Gauge
VF-22SB-PGS	Housing w/ Direct Reading Differential Pressure Gauge & Sight Glass
VF-22SB-PGWP	Housing w/ Direct Reading Differential Pressure Gauge & ¾" NPT Coupling for Water Probe
VF-22SB-S	Housing w/ Sight Glass
VF-22SB-WP	Housing w/ ¾" NPT Coupling for Water Probe
VF-22SB-PG2WP	Housing w/ 1/8" NPT thread to accept compatible Gammon or Schultz DP Pressure Gauge & ¾" NPT Coupling for Water Probe
644160	Mounting Bracket
644964	Grounding Cable
606521	Closure O-Ring

Differential Pressure Indicator -
The piston-type differential pressure indicator provides a simple visual warning. When 15 psi (1.03 bar) differential pressure is reached, the gauge indicator moves from green to red zone. This warning will prevent premature cartridge change-out.

Water Sight Glass - The water sight glass provides an easy means to detect water in the sump. The weighted ball, visible in the sight glass, will float only when water is present. The floating ball is an indication water should be drained from the housing to prevent both cartridge contamination and water traveling downstream from the housing. Not for Avgas 100 LL.

ACCORDING TO THE REQUIREMENTS OF EUROPEAN PRESSURE EQUIPMENT DIRECTIVE (PED) 2014/68/EU ART. 4.3, WITHIN THE OPERATING LIMITS PROVIDED ON VESSEL NAMEPLATE AND SUMMARIZED BELOW, THESE FILTERS ARE DESIGNED AND MANUFACTURED IN ACCORDANCE WITH THE SOUND ENGINEERING PRACTICE AND EXEMPT FROM CE MARKING AND CERTIFICATION: 10 BAR(G) @ 35°C FOR AV-GAS AND JET FUEL.

21 Series Cartridges

Standard Design Features

- Recommended maximum operating temperature: 180 °F (82 °C)
- Maximum differential pressure: 75 psi (5.17 bar)
- pH range from 5 to 9
- Flow direction: Outside to in
- Cartridge dimensions: OD - 6" (152 mm), ID - 1 ½" (38 mm), Nominal Length - 9" (229 mm)

Materials

- Carbon steel structural components
- All metal components coated to protect against corrosion
- Standard gaskets are Buna-N —other materials available on request

COMPRESSED AIR OR GAS

OPERATING PRESSURE		FLOW
psi	kg/cm²	scfm
10	.70	75
25	1.76	95
40	2.80	105
50	3.50	120
75	5.25	135
100	7.0	155
150	10.5	180

FLOW RATES

MODEL NUMBER	MICRON RATING	MAX. RECOMMENDED FLOW RATE					
		DIESEL		KEROSENE		GASOLINE	
		gpm	lpm	gpm	lpm	gpm	lpm
FILTER SEPARATOR							
CC-21-7	1	23	87	35	133	45	170
CC-21B	10	23	87	35	133	45	170
CC-21C	25	23	87	35	133	45	170
FILTER							
CF-609-2PLO	2	45	170	45	170	45	170
CF-609-10PLO	10	45	170	45	170	45	170
CF-609-25PLO	25	45	170	45	170	45	170
ABSORPTIVE FILTER							
FG-O-609-2	1	18	68	36	136	45	170
GNG-609-5PL	5	18	68	36	136	45	170
GNG-609-25PL	25	18	68	36	136	45	170

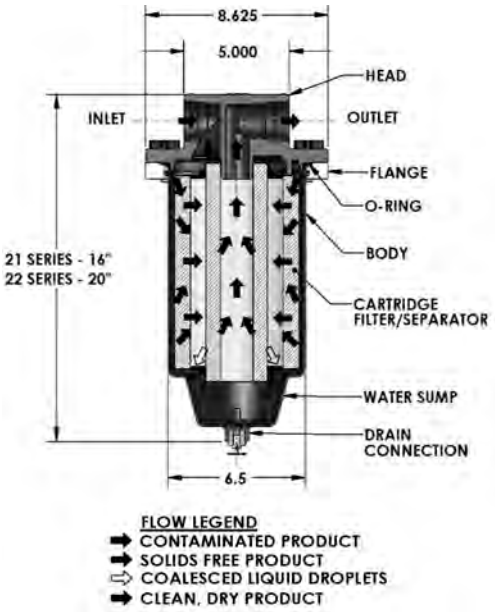

Standard Design Features

- Recommended maximum operating temperature: 180 °F (82 °C)
- Maximum differential pressure: 75 psi (5.17 bar)
- pH range from 5 to 9
- Flow direction: Outside to in
- Cartridge dimensions: OD - 6" (152 mm), ID - 1 ½" (38 mm), Nominal Length - 12" (305 mm)

Materials

- Carbon steel structural components
- All metal components coated to protect against corrosion
- Standard gaskets are Buna-N —other materials available on request

COMPRESSED AIR OR GAS

OPERATING PRESSURE		FLOW
psi	kg/cm²	scfm
10	.70	113
25	1.76	143
40	2.80	158
50	3.50	180
75	5.25	203
100	7.0	233
150	10.5	270

FLOW RATES

MODEL NUMBER	MICRON RATING	MAX. RECOMMENDED FLOW RATE					
		DIESEL		KEROSENE		GASOLINE	
		gpm	lpm	gpm	lpm	gpm	lpm
FILTER SEPARATOR							
CC-22-7	1	30	114	50	189	60	227
CC-22B	10	30	114	50	189	60	227
CC-22C	25	30	114	50	189	60	227
FILTER							
CF-612-2PLO	2	56	212	56	212	56	212
CF-612-10PLO	10	56	212	56	212	56	212
CF-612-25PLO	25	56	212	56	212	56	212
ABSORPTIVE FILTER							
FG-O-612-2	1	25	95	50	189	60	227
GNG-612-5PL	5	25	95	50	189	60	227
GNG-612-25PL	25	25	95	50	189	60	227

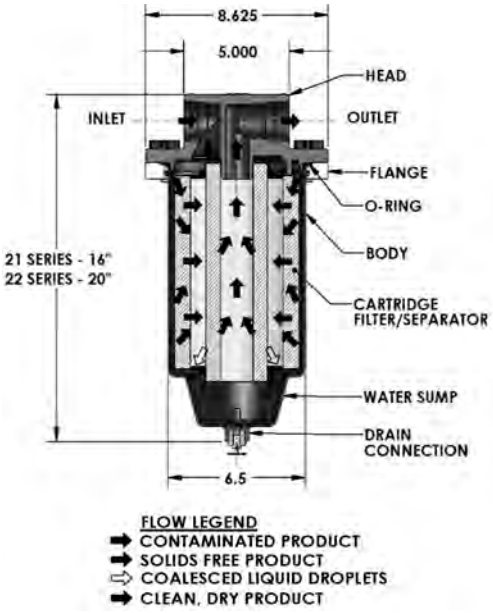

SuperFlex™ Housings

Facet SuperFlex housings are small, economical, carbon steel housings that may be used as filters, filter separators or air/gas separators depending on the cartridges used. Stainless steel construction is available. Contact your Facet Representative for details.

Liquid Filtration

MS Series SuperFlex Filters remove solids from liquids, compressed air or natural gas. Facet's M Series (high efficiency, screen wrapped or multipleated) cartridges, stacked 1, 2 or 3 high, are used.

Liquid-Liquid Separation

VCS Series SuperFlex Filter Separators remove water and solids from gasoline, diesel fuel, fuel oil, insulating oil, kerosene, lube oils, solvents and many other petroleum based products where water content is a problem. This housing requires Facet Model CC-23-7 or CC-23C coalescer cartridges and Model CS-94 or CS-94C pleated paper separator cartridges, stacked 1, 2 or 3 high.

Air/Gas Separation

AGS Series SuperFlex Air/Gas Separators remove oil, water, mist and solids from compressed air or natural gas. This housing requires Facet Model CC-23-7 coalescer cartridge and Model CS- 98-2 pleated paper separator cartridge.

Standard Housing Design Features

- Welded carbon steel construction
- ASME Code, Section VIII, Div. 1, stamped and certified
- Designed for 250 psi @ 250 °F (17.23 bar @ 121 °C)
- Main closure: Blind flange
- Head gasket: Buna-N o-ring —other materials available on request
- Vent connections: ¾" NPT
- Drain connections: ¾" 3000# NPT
- Inlet and outlet connections: 2" 3000# NPT
- Interior: Epoxy coated
- Exterior: Shop primer

Options

- 304 stainless steel construction
- Air eliminator
- Drain valve
- Pressure gauge assembly
- Pressure relief valve
- Adjustable support stand

SuperFlex™ Housings

DATA

HOUSING MODEL NUMBER	HOUSING ONLY PART NUMBER	ADAPTOR KIT MODEL NUMBER	ADAPTOR KIT PART NUMBER	HOUSING WEIGHT		HOUSING LIQUID VOLUME	
				lbs	kg	gal	ltr
LIQUID FILTRATION							
MS-1C-A	910000-1	MS-1CK	690542	120	54	7	26.5
MS-2C-A	910000-2	MS-2CK	686497	140	63	10.5	39.7
MS-3C-A	910000-3	MS-3CK	681021	160	72	14	53
LIQUID-LIQUID SEPARATION							
VCS-1C-A	910000-1	VCS-1CK	676347	120	54	7	26.5
VCS-2C-A	910000-2	VCS-2CK	676348	140	63	10.5	39.7
VCS-3C-A	910000-3	VCS-3CK	676349	160	72	14	53
AIR/GAS SEPARATION							
AGS-1C-A	910000-1	AGS-1CK	676347	120	54	7	26.5
AGS-2C-A	910000-2	AGS-2CK	676348	140	63	10.5	39.7
AGS-3C-A	910000-3	AGS-3CK	676349	160	72	14	53

Weights and volumes are aproximate.

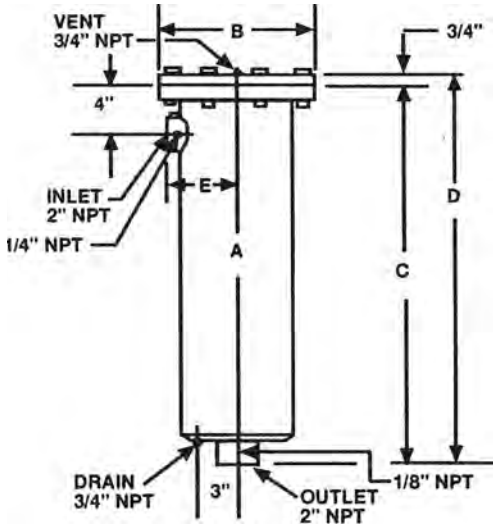

DIMENSIONS

HOUSING	A		B		C		D		E	
	in	mm	in	mm	in	mm	in	mm	in	mm
1 High	8 5/8	219	11 5/8	295	35 3/8	898	36 1/8	917	7 1/8	181
2 High	8 5/8	219	11 5/8	295	49 7/8	1267	50 5/8	1286	7 1/8	181
3 High	8 5/8	219	11 5/8	295	63 7/8	1622	64 5/8	1641	7 1/8	181

All dimensions are for estimating purposes only.

M Series Filter Cartridges

See Section 1 - M Series High Efficiency Pleated Paper Filter Cartridges

VCS Series SuperFlex™ Filter Separator Cartridges

CC-23C Coalescer and CS-94 Separator Cartridge Data

- Provides two-stage coalescing and separation
- Recommended maximum operating temperature: 240 °F (115 °C)
- Maximum differential pressure: 75 psi (5.17 bar)
- Flow direction: Outside to in
- pH range from 5 to 9
- All metal components coated to protect against corrosion

DIMENSIONS

MODEL	MICRON RATING	OD		ID		NOMINAL LENGTH		WEIGHT	
		in	mm	in	mm	in	mm	lbs	kg
COALESCERS									
CC-23-7	1	7 5/8	194	5 5/8	143	13 11/16	350	4	1.8
CC-23C	25								
SEPARATORS									
CS-94	5	4 1/8	105	1 7/8	48	10 1/2	270	3	1.4
CS-94C	25								

All dimensions and weights are approximate.

AGB Series SuperFlex™ Air/Gas Separator Cartridges

CC-23-7 Coalescer and CS-98-2 Separator Cartridge Data

- Provides two-stage separation and filtration
- Recommended maximum operating temperature: 240 °F (115 °C)
- Maximum differential pressure: 75 psi (5.17 bar)
- Flow direction: Outside to in
- pH range from 5 to 9
- All metal components coated to protect against corrosion

DIMENSIONS

MODEL	MICRON RATING	OD		ID		NOMINAL LENGTH		WEIGHT	
		in	mm	in	mm	in	mm	lbs	kg
COALESCERS									
CC-23-7	0.5	7 5/8	194	5 5/8	143	13 11/16	350	4	1.8
SEPARATORS									
CS-98-2	3	4 1/8	105	1 7/8	48	10 1/2	270	3	1.4

All dimensions and weights are approximate.

Screw Base Adapter

Top view

Side view with bolt

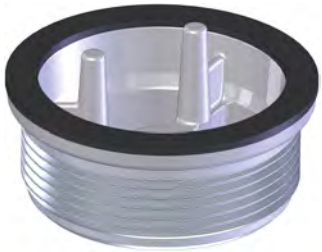

Bottom view

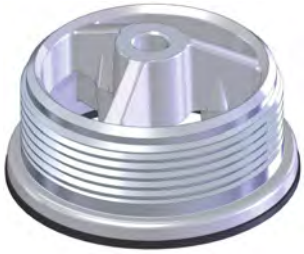

Side view

Improved design for added strength

Facet's screw base adapter has been redesigned to provide the strongest adapter on the market today. The adapter is now made of aluminum with increased locating pin strength when compared with other designs. Gasket material is Buna-N.

The adapter may be used with all Facet 6" (152 mm) diameter screw base cartridges and is compatible with cartridges from other manufacturers.

The design is compatible with all aviation fuels and provides a temperature range up to 250° F (115° C). It is also interchangeable with Velcon's 6000T screw base adapter.

PART NUMBER	COMMENTS
677453A-AM*	½" bolt for Facet Vessels
677453A-375-AM*	⅜" bolt for Velcon Vessels

* Complete Assembly including adapter, gasket, bolt and washers

For 6" OD (152 mm) 3½" ID (89 MM) 14½" (368 mm) LG CARTRIDGES

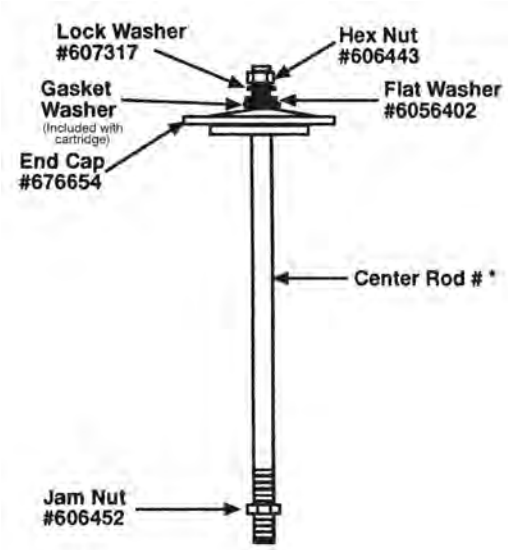

1 DEEP

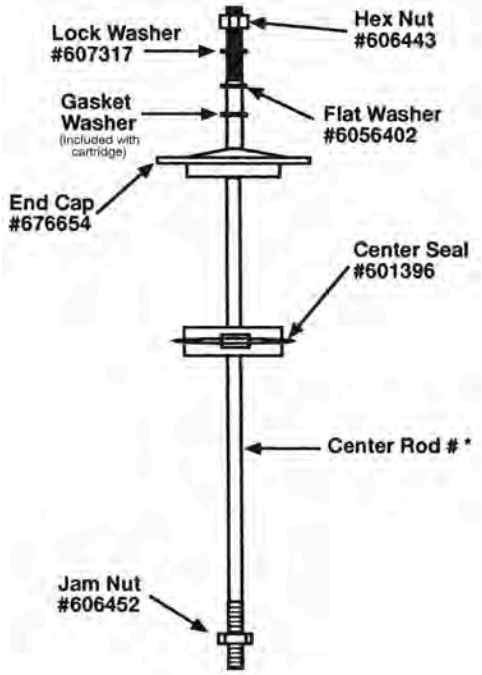

2 DEEP

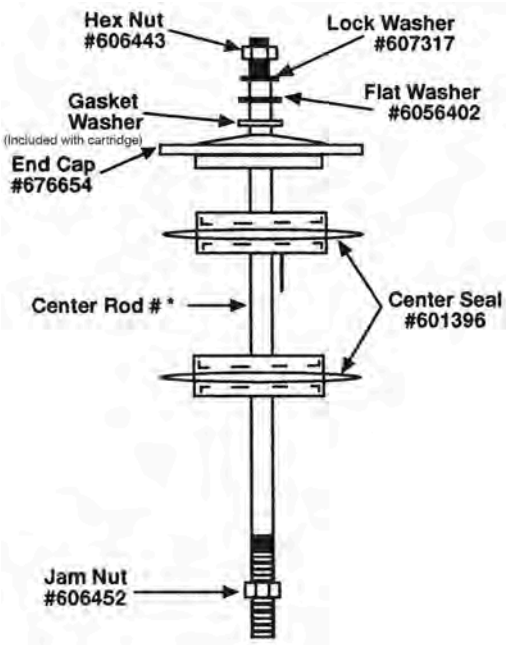

3 DEEP

CENTER ROD	
Overall Cartridge Length (in)	Part Number
14½	678901
28¾	678905
43¼	678907
57¼	678909

Note: Nuts, washers and center rods are stainless steel.

Cartridge Torque Recommendations

CARTRIDGE STYLE	RECOMMENDED SEALING TORQUE
OPEN ENDED FILTERS	FLAT SEAL 15 LBS. FT. KNIFE EDGE SEAL 10 LBS. FT.
OPEN ENDED COALESCERS & 6" MONITORS	FLAT SEAL 20 LBS. FT. KNIFE EDGE SEAL 10 LBS. FT.
THREADED BASE COALESCERS & 6" MONITORS	SCREW BASE 30 LBS. FT.
OPEN ENDED SEPARATORS	FLAT SEAL 7 LBS. FT. KNIFE EDGE SEAL 5 LBS. FT.
BLIND END SEPARATORS	FLAT SEAL 7 LBS. FT. KNIFE EDGE SEAL 5 LBS. FT.
OPEN ENDED CIF FILTERS	FLAT SEAL 5 LBS. FT. KNIFE EDGE SEAL 5 LBS. FT.

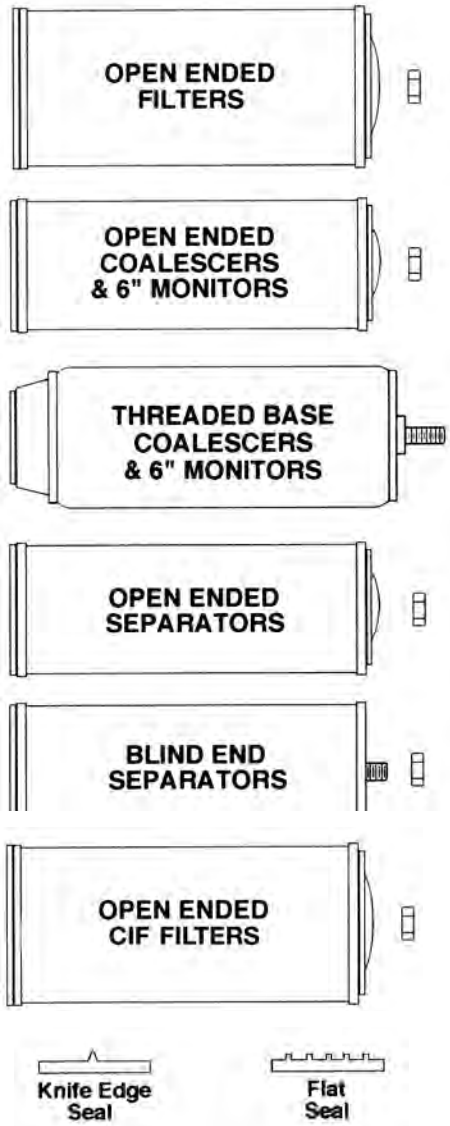

TORQUE CONVERSION TABLE			
Pounds Foot	Pounds Inch	Kilograms-meter	Newton-Meter
5	60	.69	6.53
7	84	.97	9.14
10	120	1.38	13.05
20	240	2.77	27.10
30	360	4.15	39.15

Cleaning Procedures - Teflon® Screen and Synthetic Separator Cartridges

It is recommended that this procedure is carried out with every coalescer change to ensure full potential and longer life of the separator. Make sure hands are kept clean and free of grease or other contamination throughout the cleansing operation. It is also recommended that gloves (preferably thin rubber) be worn throughout this operation so as to avoid contact between bare hands and the separator screen / mesh.

1. CAREFULLY remove each element from the filter separator.

2. Submerge the element in clean, dry fuel and wash it using a gentle, reciprocating action, holding the element first by one end cap and then the other. (DO NOT touch the separator screen/mesh with your bare hands, or allow any grease to come into contact with the element.)

3. Holding the element by the endcaps, visually inspect the entire surface of the screen for damage and contamination. If there are any visible flaws or debris that have not been removed by washing, the cartridge should be replaced.

4. While separator is fuel wet, hold the element horizontal and allow tap water to drip onto the screen. The water must not be sprayed and it must not fall more than 3" (7.5 cm) before contacting the screen. The water will run off instantly if the element is not contaminated. Continue testing the element by slowly rotating and moving it back and forth until the entire surface has been tested. If the water does not run off, but disappears through the screen and is found inside the element, then the element has to be further cleaned as described in step 6.

5. If the element passes the surface inspection (step 3) and the water test (step 4), rinse it thoroughly in clean fuel to remove traces of water and air dry prior to reinstalling.

6. If the element fails the water test (step 4), it may be further cleaned by repeating the cleaning stage (step 2) using isopropyl alcohol in place of fuel. After cleaning, the element should be drained and rinsed in clean, dry fuel to remove all traces of isopropyl alcohol if used. Another alternative is to use a spray of hot water (not from a pressure washer). Allow the cartridge to fully dry. After using either procedure, repeat the water test (step 4). If the element does not pass the water test after this operation, it must be replaced.

7. If there are visible tears, nicks, or cuts, they can be repaired as long as they are not larger than 1/8" in diameter. Use brightly colored fingernail polish or epoxy to repair the area. The nail polish allows repairs to be easily observed in the future. After you have repaired the element, wet the element in fuel and repeat the water test (step 4).

NOTE: The use of detergents (i.e., soap, powder cleanser of any kind), steam, or compressed air during any of the above operations IS NOT RECOMMENDED because they can affect the operation of the separator.

1. What is the operational life expectancy of the Teflon and Synthetic cartridge?

Facet Teflon & Synthetic separator cartridges are cleanable and reusable. They should be inspected and tested before reusing. Cartridge service life should not be extended beyond 3 years. Follow Facet cleaning procedures for Teflon and Synthetic cartridges.

2. What is the shelf life expectancy of the Facet cartridges?

Most elements are a minimum of five years if sealed and in temperature controlled environment. Monitor should be installed within 2 years of shipment from Facet stock.

3. When do I change out my coalescer separator?

A. Coalescer elements must be replaced when:

1. Filter Membrane (Milipore®) Test indicates elements are not performing (Refer to Section 3).
2. Corrected Differential pressure exceeds 15 psi or there is a sudden drop in differential pressure.
3. Continuous sump samples indicate surfactants, microbial or solid contaminants.
4. Free water detection test indicates elements are not performing (Ref. Section 3-3).

4. Is there a minimum flow rate coalescer separators?

Operating a coalescer separator at less than 25% of rated flow, along with extended periods of inactivity, can increase the risk for microbiological growth on the elements due to free water not being released from the coalescer.

5. What is the typical clean differential pressure drop?

Filter/separators	2-4 psid clean at ambient temp.
Micronic Filters	.5-4 psid clean at ambient temp.
2" Monitors	6-7 psid clean at ambient temp.
6" Monitors	3-4 psid clean at ambient temp.

6. Typical element change-out recommendations at maximum rated flow.

Filter/Separators	15 psid
Monitors	15 psid
Micronics	15 psid
“HP”	15 psid
Clays	Based on MSEP test

7. What is the rupture pressure for each element?

Filter/Separators	75 psid
Monitors	174 psid
Micronics	75 psid
“HP”	15 psid
Clays	N/A

8. What is the purpose of the Slug valve?

The slug valve stops the flow of product when excessive water is collected in the coalescer separator sump. It works in conjunction with the float control. The slug valve can also be furnished with rate of flow control which is used to control flow through the coalescer separator and with a check valve feature to prevent back-flow.

9. What is the operation of a Water Probe?
The water probe detects the level of water electronically and then can open and close the auto water drain valve or slug valve, shut down pump and send alarm to control panel.

10. What is the reason for a Clay Treater?
The clay treater removes surfactants from fuel to allow coalescer separators to perform properly. The surfactants will disarm the coalescer elements.

11. What is the function of the vessel heaters?
The heater keeps water from freezing in the sump and drain lines.

12. What data do you need to know to size a vessel?
Refer to Application Data Sheet in your catalog.

13. Which should be used, clay bags or canisters?
Canisters have gaskets that improve sealing and have less chance of bypassing. Bags, on the other hand, hold more clay and cost about 40% less.

14. Can clay bags be used in Velcon vessels?
Not usually. Velcon vessels are built similar to “M” series filter vessels except without adaptors for cartridge sealing. They use center rods, center seals, and end caps. There are conversion kits but are cost prohibitive. Two things to remember, this can be a tremendous selling tool for Facet vessels, but it does add additional cost.

15. What colors are used for what fuels?
Jet - Clear
AV Gas - Blue,
High Sulfur Diesel - Red.

16. Can dye (color) in fuels be removed?
In most instances, “no.”

17. Why use horizontal versus vertical housing?
Space and ease of maintenance.

18. Should a filter be installed upstream of a coalescer separator?
Depends on the application. If the customer is having a problem with solids you should definitely have a micronic filter in front of your coalescer separator. The micronic filter is anywhere from a third to a fourth of the cost and has four times the surface area.

19. What is the difference between free and entrained and dissolved water?
1. Free water is created when the fuel has all the water it can dissolve plus more. This extra water is then free water. Free water is usually not visible as a haze until you get above 30 to 40 ppm free water. This free water is all that a coalescer or absorbent cartridge can remove.
2. Entrained water: Discrete water droplets carried by a continuous liquid or gas phase when water is immiscible with the liquid. May be separated from the continuous phase by coalescing and gravity separation. Usually picked up in a system by condensation or a water washing used in process.
3. Dissolved water is the water that is in solution or basically not visible in the fuel. The amount changes with temperature. Fuel holds more water as the temperature increases.

20. Is the delta P gauge on a clay treater actually telling you anything?
Not really. This is a common misconception. The only true way to tell if the clay is working is to take a MSEP test. This test will be taken on the inlet and the outlet and compared. The reading from the outlet should be higher. A good quality fuel has a reading of 85 or better. The closer you get to 100 the better the fuel quality. If the fuel going in is 80 and the outlet is 80 or less, you would need to change out the clay.

21. How many pounds of solids does our MP series filter element hold?
Up to 3-5 pounds per 14" length dependent upon the micron rating and type of solids present.

22. With AVGAS, can you flow more through the same coalescer separator?
The Energy Institute has extended Specification EI 1581 to include Av-Gas that is hydrocarbon based and has aromatics content that is similar to Jet Fuel under Category C sizing and flow.

23. What is the recommended sealing torque on screw base cartridges?
30 lbs. Ft.

24. What is the mesh size and micron rating of Facet's Synthetic separator?
50 micron, 267 mesh.

25. What are the benefits of Facet's CIF Cartridge?
No metal components, less expensive while maintaining high efficiency of M Series elements and reduced disposal volume and cost.

26. Does the size of the water droplets indicate the coalescing efficiency?
Downstream: Yes, the bigger the drops the more the fall. Saves Separator from having to do anything.

27. How is the gallon per minute of the coalescer calculated?
Flow per linear inch which is based on EI test (Jet Fuel).

28. Can our immersion heaters be wired for a signal light?
Yes.

29. What are certificates of similarity?
To provide certificate of test data in similar type vessels using flow rates that determine the correct amount of coalescers and separators. Upgrading an older vessel to EI 1581 current edition or changing from competitor vessel to Facet.

30. Are Material Safety Data Sheet (MSDS) required for the products manufactured by Facet?
Items manufactures by Facet are considered "articles" by definition of the regulations and therefore do not need MSDS sheets.

31. What is the correct procedure for draining the sump on a coalescer separator?
Per ATA-103 guidelines, drain fuel at maximum practical flow into a suitable container. The vessel must be pressurized, but fuel does not have to be flowing.

Facet
Filtration Group®

Scan QR Code to find our locations

facet@filtrationgroup.com

www.facetfiltration.com

12112025

© 2025 Facet
All rights reserved. No part of this publication may be reproduced, distributed, or transmitted in any form or by any means, including photocopying, recording, or other electronic or mechanical methods, without the prior written permission of the publisher, except in the case of brief quotations embodied in critical reviews and certain other noncommercial uses permitted by copyright law.